TC8530

DATA AND ETHERNET
FIBER OPTIC MULTIPLEXER

User's Manual

MODEL: _____

S/N: _____

DATE: _____

Notice!

Although every effort has been made to insure that this manual is current and accurate as of date of publication, no guarantee is given or implied that this document is error free or accurate with regard to any specification. TC Communications, Inc. reserves the right to change or modify the contents of this manual at any time without prior notification.

TC COMMUNICATIONS
FIBER OPTIC CONNECTIVITY

TC Communications, Inc. 17881 Cartwright Road - Irvine, CA 92614
Tel: (949) 852-1972 Fax: (949) 852-1948 Web Site: www.tccomm.com Email: info@tccomm.com

Table Of Contents

Chapter 1 - Overview

Features

- ❒ **Simultaneously Multiplexes 1 Channel 10/100 Ethernet and up to 12 Channels of Data (Data can be RS-232, RS-422, RS-485*, TTL* or Dry Contact*)**
- ❒ **10/100 Auto-Negotiating and Bandwidth Control on the Ethernet Bridging Port (32Kbps increments up to 10Mbps)**
- ❒ **4, 8 or 12 Channels of Data, Replaceable Line Interface Module**
- ❒ **Data Rates up to 128 Kbps for Async & up to 64 Kbps for Sync**
- ❒ **Web-Based or Telnet Configuration**
- ❒ **Hardened Temperature (optional), -40°C to 80°C Exceeds NEMA & CALTRANS Specs**
- ❒ **Optional Optical Redundancy**
- ❒ **Distances up to 100km, Multimode (1310nm) or Single Mode (1310nm/1550nm)**
- ❒ **Two-way "One Fiber" Communication (optional)**
- ❒ **Built-In Power Redundancy, Optional 24VDC, or 115/230VAC Power**
- ❒ **Local Dry Contact Alarm Relay**
- ❒ **Rackmount or Standalone**

Description

The TC8530 Data and Ethernet Fiber Optic Multiplexer, multiplexes various combinations of data channels such as (RS-232, RS-422, RS-485, TTL, or Dry Contact) & 1 Channel 10/100 Ethernet over single mode or multimode fiber.

The TC8530 supports distances to more than 100 km and offers a two-way, “one fiber” communication option to maximize fiber cable usage. Optional redundant power and optics include automatic switchover for maximum reliability.

Setup, diagnostics and control is accessed via Serial Terminal, Telnet management ports. Diagnostics include LED indicators, dry contact alarms and local and remote loopback.

The Ethernet port auto-negotiates at 10/100 with full 10Mbps throughput and rate control in increments of 32Kbps. It is IEEE 802.3/802.3u/802.3x compliant.

The TC8530 is available as standalone unit or rackmount card. The rackmount card fits into or 19" Rackmount Card Cages. Fiber optic connectors are ST, FC or SC. Standard power is 12VDC and includes built-in redundancy. Optional power sources include 24VDC or 115/230VAC with an external power cube. High temperature (-20°C to 70°C) and extreme temperature (-40°C to 80°C) versions are also available.

Consult with factory for availability.

Typical Application Using the TC8530's

Typical applications include extending multiple Data lines and Ethernet channels to a remote site such as campus networks, substations, etc. The two-way "one fiber," option can double usage of existing fiber optic cable plants.

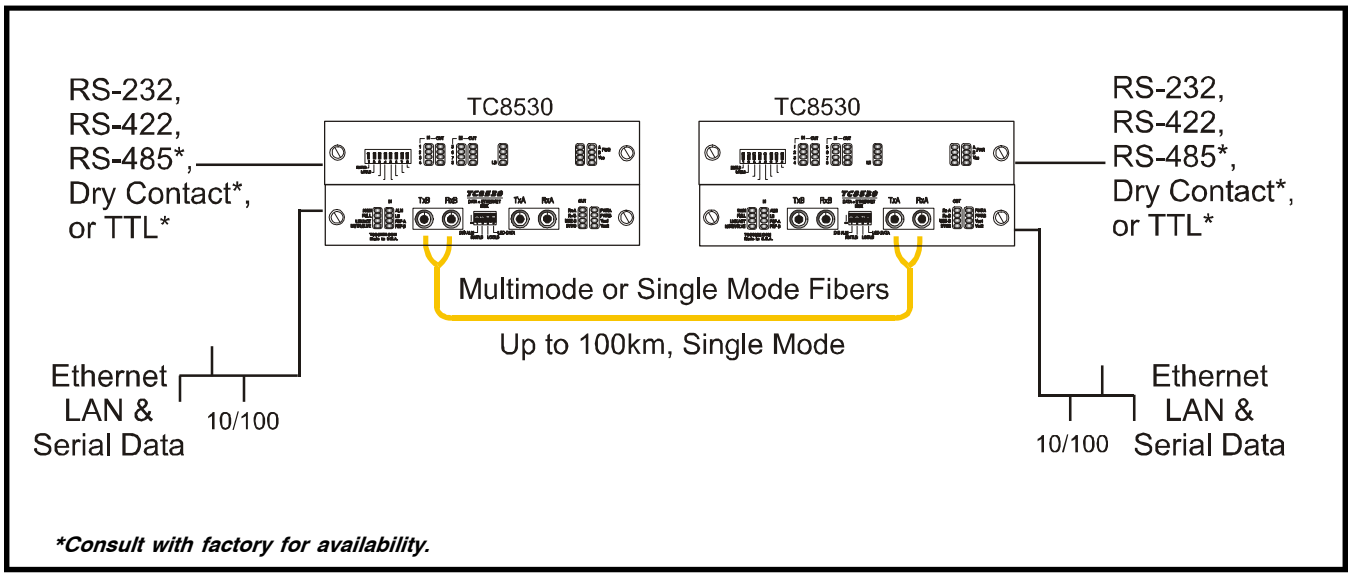

Figure 1. Typical Application Using TC8530 Fiber Optic Multiplexers

Optical Specifications

Multimode Model

Transmitter:	LED; typical Launch Power:	-17.0 dBm* (1310nm, @62.5/125μm)
Receiver:	PIN Diode; typical Sensitivity: Optic saturation level:	-33.0 dBm* (1310nm, @62.5/125μm) -11.0 dBm* (1310nm, @62.5/125μm
Loss Budget:	1310nm Multimode @62.5/125μm:	15 dB
Distance:	1310nm Multimode, @62.5/125μm:	up to 4km distance*
Wavelength:	1310nm Multimode:	
Connector:	ST SC	

Single Mode 1310nm, 20km Model

Transmitter:	FP Laser; typical Launch Power:	-14 to -7 dBm* (1310nm, @9/125μm)
Receiver:	PIN Diode; typical Sensitivity: Optic saturation level:	-34.0 dBm* (1310nm, @9/125μm) -3 dBm* (1310nm, @9/125μm)
Loss Budget:	1310nm Single Mode, @9/125μm:	20 dB
Distance:	1310nm Single Mode, @9/125μm:	up to 20 km distance
Wavelength:	1310nm Single Mode (LASER):	
Connector:	ST FC SC	

Single Mode 1310nm, 75km Model

Transmitter:	FP Laser; typical Launch Power:	-3 to 0dBm* (1310nm, @9/125μm)
Receiver:	PIN Diode; typical Sensitivity: Optic saturation level:	-36.0 dBm* (1310nm, @9/125μm) -3 dBm* (1310nm, @9/125μm)
Loss Budget:	1310nm Single Mode, @9/125μm:	33dB
Distance:	1310nm Single Mode, @9/125μm:	up to 75km distance
Wavelength:	1310nm Single Mode (LASER)	
Connector:	ST FC SC	

Single Mode 1550nm, 75km Model

Transmitter:	DFB Laser; typical Launch Power:	-10 to -1dBm* (1550nm, @9/125μm)
Receiver:	PIN Diode; typical Sensitivity: Optic saturation level:	-34.0 dBm* (1550nm, @9/125μm) 0 dBm* (1550nm, @9/125μm)
Loss Budget:	1550nm Single Mode, @9/125μm:	24dB
Distance:	1550nm Single Mode, @9/125μm:	up to 75km distance
Wavelength:	1550nm Single Mode (LASER)	
Connector:	ST FC SC	

Single Fiber, 50km Model

Transmitter:	**Typical Launch Power:**	**-8 to -3 dBm* (1310nm/1550nm, @9/125μm)**
Receiver:	**PIN Diode; typical Sensitivity:** **Optic saturation level:**	**-33.0 dBm* (1310nm/1550nm, @9/125μm)** **-3 dBm***
Loss Budget:	**1310nm/1550nm Single Mode, @9/125μm:**	**29 dB**
Distance:	**1310nm/1550nm Single Mode, @9/125μm:**	**up to 50km distance**
Wavelength:	**1310nm/1550nm Single Mode:**	
Connector:	**SC**	**Only**

Launch power, sensitivity and distance are listed for reference only. These numbers may vary.

Theory of Operation

The TC8530 is designed to provide users with maximum flexibility, ease of use, simplicity and functionality. The unit consists of two printed circuit boards (PCBs): one for data multiplexing and a second for 10/100Base-T Ethernet signal and Data. The data interface PCB (upper board) provides an optional 4 or 8 channels of data via RJ-11 connectors.

The optical PCB (lower board) provides for the one channel 10/100Base-T Ethernet and up to four channels of data via RJ-45 connectors, optic transmitter/receiver operations and data serialization. It converts electrical signals to optic signals and converts the parallel data bits to serial format for data transmission across the fiber link. The reverse process occurs at the opposite end, where the serial data is converted into parallel format for the electrical signals, which is then transmitted to another device.

NOTE: Utilization of the data channels on the Optical and Interface boards: Note, the optical card will always be used for the Ethernet channel.

1. If the customer orders only four channels of data, then only the Optical PCB (lower board) will be used.
2. If the customer orders eight channels of data, then only the Interface PCB (upper board) will be used.
3. If the customer orders 12 channels of data, then both the Optical PCB (lower board) and Interface PCB (upper board) will be used.

Any loss of optical signal on the primary or secondary port will trigger the major alarm. The major alarm LED is located at the bottom left of the front panel on the optical board (see Figure 2). Once activated, the major alarm will set off an audio buzzer and the Dry Contact Relay will be released (set to the "CLOSED" condition).

The "DIS ALM" DIP switch on the optical board is provided to disable the audio buzzer and the dry contact relay.

At the heart of the TC8530s are FPGA (Field Programmable Gate Array) integrated chips. These modern chips allow for desirable benefits such as low power consumption, configuration flexibility, high reliability, and long MTBFs.

LEDs, DIP Switches and Connectors

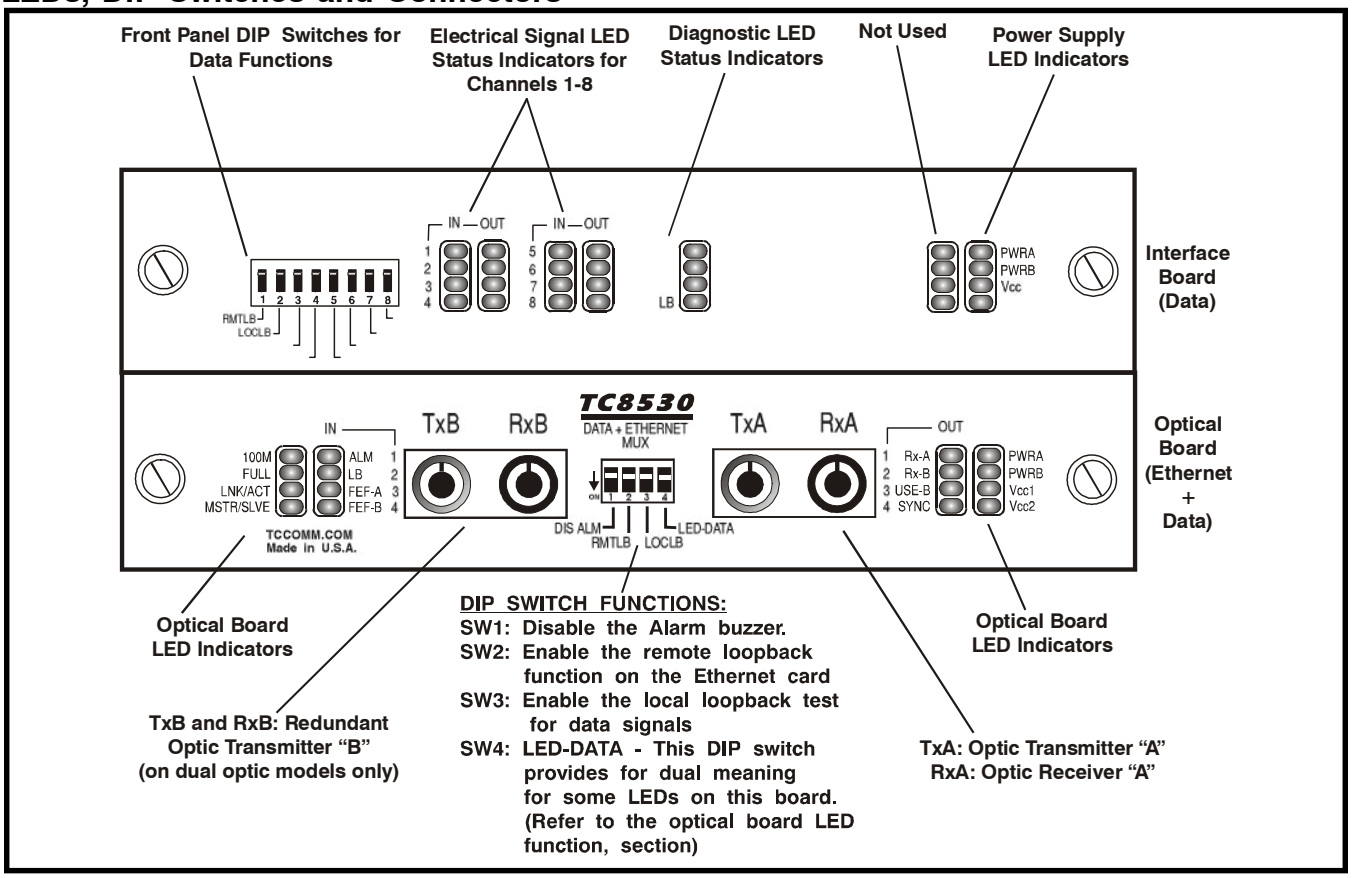

Figure 2. TC8530 Front Panel

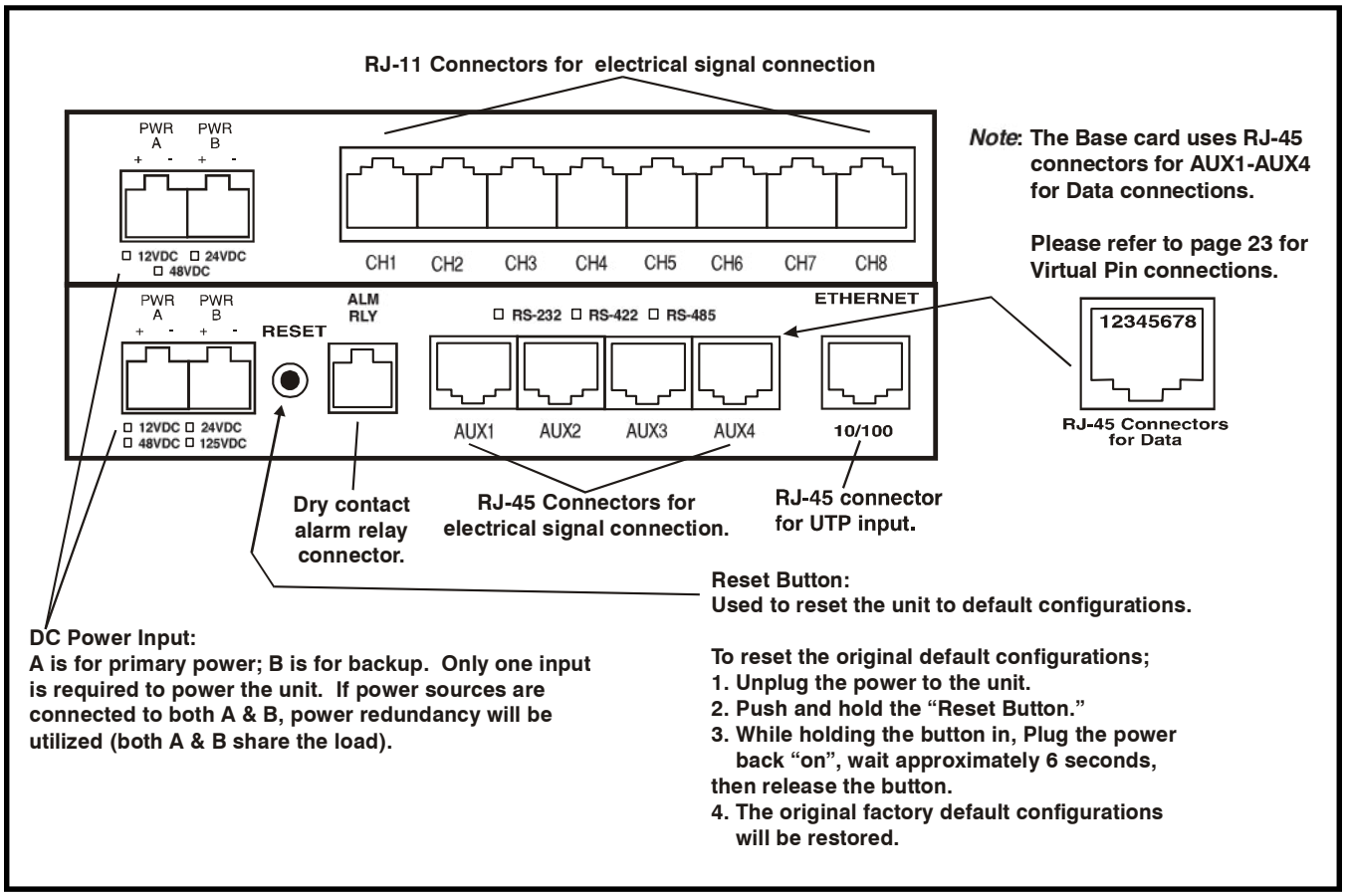

Figure 3. TC8530 Rear Panel with Terminal Blocks

Optic Board (10/100 Base-T Card) LEDs and DIP Switch Functions

Ethernet, Alarm, Optical and Data Status LEDs

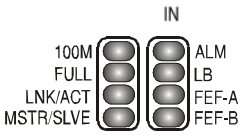

Note: The second column of LEDs have a second function. It monitors the electrical input signal for the optical board data channels 1- 4 (AUX1...AUX4). The "Input" of each channel 1 through 4 is monitored by the following LEDs: ALM=CH1, LB=CH2, FEF-A=CH3, and FEF-B=CH4 respectively.

To enable this second function for data monitoring, set the optical board DIP switch #4 to the down "On" position.

The primary functions are stated below. To monitor the primary functions, the SW#4 on the optical board must be to the up "Off" position.

100M: When illuminated, this LED indicates that the Ethernet Port is 100Mbps. When Off, it indicates that the Ethernet Port is 10Mbps.

FULL: When illuminated, this LED indicates that the Ethernet Port is Full Duplex. When Off, it indicates that the Ethernet Port is Half Duplex.

LNK/ACT: When illuminated, this LED indicates that an Ethernet Signal is detected. When Flashing, it indicates that Ethernet activity is detected.

MSTR/SLVE: Generally, the unit will be set to factory default Master or Slave. When illuminated, this LED indicates that unit is set as Master. When Off, it indicates the unit is set as a Slave.

ALM: Lit, when triggered by the following alarm conditions:

1. Optic signal lost or invalid on Primary or Secondary optical fiber receiver.
2. Loss of power on a unit (local or remote) - this alarm will automatically reset (cancel) on both units when power is restored.

When flashing, it indicates that the unit is in diagnostic mode: Local or Remote Loopback tests are active or the SIGGEN function is active.

The alarm also activates the dry contact relay (normally in the OPEN position). The local unit's alarm can be cleared by enabling the "DIS ALM" dip switch SW1 on the front panel of the optical board to the down (on) position.

LB: When lit, it indicates that either the remote loopback or local loopback diagnostic function is enabled.

For normal operation, both the remote loopback and local loopback DIP switches should be in the up "Off" position. When both diagnostic modes are off, the LED will be off.

FEF-A: When illuminated, this LED indicates that the Primary link (optical side "A"), far end, has detected a fault condition. (Either the Local TxA or Remote RxA is bad.)

FEF-B: When illuminated, this LED indicates that the Secondary link (optical side "B"), far end, has detected a fault condition. (Either the Local TxB or Remote RxB is bad.)

Note: By default, Far End Fault Detection will only be enabled on units with optical redundancy.

Optical, Power & Data Status LED Indicators

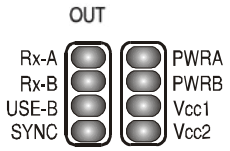

Note: The first column of LEDs have a second function. It monitors the electrical output signal for the optical board data channels 1- 4 (AUX1...AUX4). The "Output" of each channel 1 through 4 is monitored by the following LEDs: Rx-A=CH1, Rx-B=CH2, USE-B=CH3, and SYNC=CH3 respectively.

To enable this second function for data monitoring, set the optical board DIP switch #4 to the down "On" position.

The primary functions are stated below. To monitor the primary functions, the SW#4 on the optical board must be to the up "Off" position.

PWR A & B: Indicate the status of dual power sources at the power jacks on the rear panel (9V to 12V DC). Note: when power redundancy is utilized, both "A" and "B" LEDs will be lit. Normally, both "A" and "B" share the load; if either power source fails, the other assumes the full load.

Vcc1 & 2: +5V DC status. There are two separate voltages derived from the power source on the Optic Board. These LEDs indicate the presence of these voltages. Both should be lit whenever power is connected to the unit.

Rx-A: When illuminated, this LED indicates that the Primary Optical Receiver (side "A") is receiving the signal above minimum sensitivity threshold.

Rx-B: When illuminated, this LED indicates that the Secondary Optical Receiver (side "B") is receiving the signal above minimum sensitivity threshold.

USE-B: When Off, it indicates that the active link is the Primary optical side (side "A"). When illuminated, this LED indicates that the active link is the Secondary optical side (side "B").

SYNC: When illuminated, this LED indicates that the fiber link has been established between the local and remote units.

Flashing, it indicates that the fiber link is broken between the local and remote units. If the units are ordered with optional, optical redundancy, then it would take both the primary and secondary optical port A and B to be broken for the SYNC LED to flash.

DIP Switch Functions

DIS ALM: Disables the alarm buzzer and the dry contact relay when enabled to the down (on) position.

RMTLB: Used to enable the Remote Loopback function for testing the data channels at the same time. All four data channels on the optical board will be in remote loopback mode.

LOCLB: Used to enable the Local Loopback function for testing the data channels at the same time. All four data channels on the optical board will be in remote loopback mode.

LED-DATA: Used to monitor the default functions of the dual function LEDs or the Input/Output status of the electrical channels on the optical board, see description on pages 10 & 11.

Interface Board (Data) LEDs and Functions

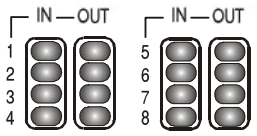

Data Signal Status LED Indicators

Data LED indicators for the RJ-11 electrical connections for each channel 1 thourgh 8 on the data board. Refer to the Electrical Signal Interface Connections & Pin Assignments section for virtual pin connections.

IN: IN (input signal) status indicators for each data channel.
Solidly lit, it indicates that the data signal is received from the local user's equipment.
Off when, data signal is not received from user's equipment.

OUT: OUT (output signal) status indicators for each data channel.
Solidly lit, it indicates that the data signal is transmitted to the local user's equipment.

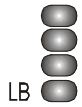

Loopback Status LED Indicator

LB: When lit, it indicates that either the remote loopback or local loopback diagnostic function is enabled.

For normal operation, both the remote loopback and local loopback DIP switches should be in the up "Off" position. When both diagnostic modes are off, the LED will be off.

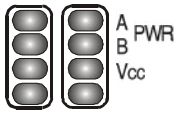

Power Status LEDs

PWR A & B: Indicate the status of dual power sources at the power jacks on the rear panel (9V to 12V DC). Note: when power redundancy is utilized, both "A" and "B" LEDs will be lit. Normally, both "A" and "B" share the load; if either power source fails, the other assumes the full load.

Vcc: +5VDC LED status indicator. Indicates the voltage is derived from the power source on the Interface Board. It should be lit whenever power is connected to the unit.

Note: The remaining unlabeled LEDs are not used. For future release.

Data Card's DIP Switch Functions

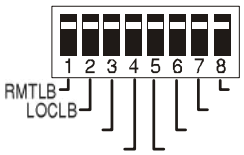

The DIP switch functions on the TC8530 apply individually to the Interface board. To activate the function, slide the appropriate switch to the On (Down or Right) position.

RMTLB: Used to enable the Remote Loopback function for testing the data channels at the same time. All eight data channels on the Interface board will be in remote loopback mode.

LOCLB: Used to enable the Local Loopback function for testing the data channels at the same time. All eight data channels on the Interface board will be in remote loopback mode.

Not used: Dip Switches 3-8 are not used, for future release.

Base (Optical) Card Internal DIP Switch (SW2)

For factory use only.

SW2_1: Not used.

SW2_2: Enable Data Port.

SW2_3: Enable Optical Redundancy (RxB).

SW2_4: Not used. (For factory use only)

Expansion (Data) Card Internal DIP Switch (SW2)

For factory use only.

SW2_1: Not used.

SW2_2: Not used.

SW2_3: Not used.

SW2_4: Not used.

SW2_5: Not used.

SW2_6: Not used.

SW2_7: Not used.

SW2_8: Not used.

Optical Redundancy (optional)

If optic redundancy was ordered with the unit, Figure 4 below applies to its operation. Optic redundancy is used to prevent the loss of data transmission in the event an optic cable, transmitter, or receiver is broken or degraded. Should this occur, the secondary optic link & receiver "B" is enabled automatically, thereby preserving the integrity of the communication. In the meantime, the "Alarm" LED will flash and the buzzer will sound to indicate a cable breakage.

When the unit is equipped with optic redundancy, the optic transmitter "TxA" and "TxB" both transmit the same signal to the remote unit. It is up to the remote unit to decide whether "RxA" or "RxB" should be used as the valid incoming optic signal. By default, "RxA" is the primary receiver; "RxB" is the standby backup.

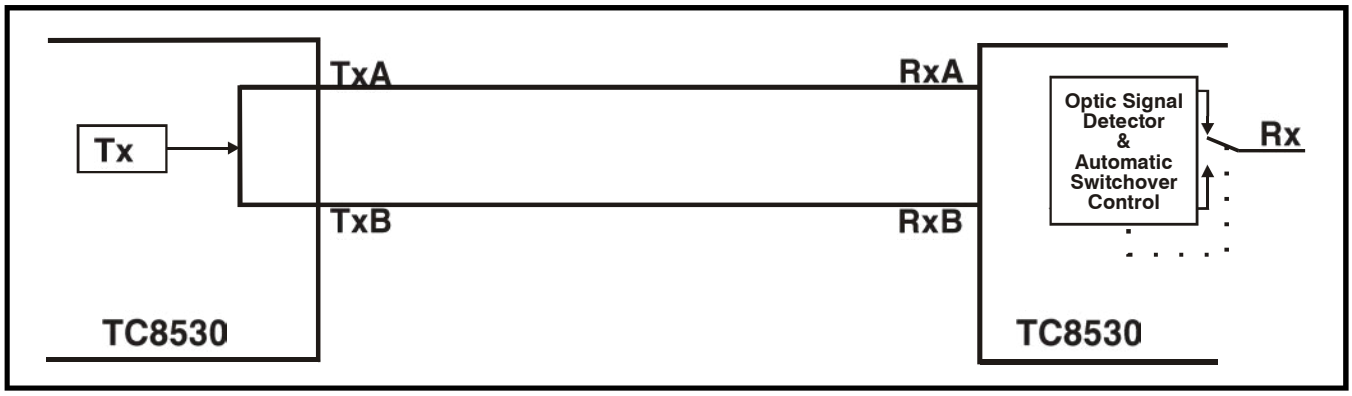

Figure 4. TC8530 (with Dual Optics) Logic Diagram

Two-way "Single Fiber" (optional)

As an option, the TC8530 supports two-way "Single Fiber" communication to distances up to 100km over single mode fiber.

It is ideal for situations where existing fiber optic cable capacity is limited. Because it doubles existing cable capacity by transmitting bi-directional signals over a single fiber, it eliminates the need to install additional fiber optic cable.

The TC8530 "Single Fiber" uses a Fiber Optic Wavelength Division Multiplexer (WDM) which enables 1310nm and 1550nm wavelengths to be transmitted simultaneously on the same fiber optic cable. The direction of the optical signals can be in the same direction or opposite directions.

Transparent to incoming data, the "Single Fiber" WDM option, effectively doubles existing cable capacity by multiplexing two separate channels over one single mode fiber.

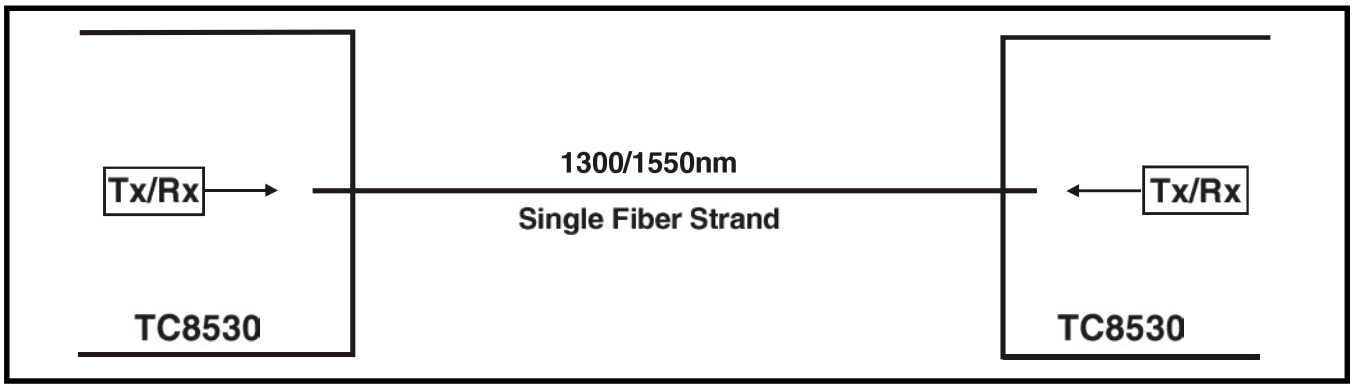

Figure 5. TC8530 (with "Single Fiber" Option) Logic Diagram

Chapter 2 - Installation

Unpacking the Unit

Before unpacking any equipment, inspect all shipping containers for evidence of external damage caused during transportation. The equipment should also be inspected for damage after it is removed from the container(s). Claims concerning shipping damage should be made directly to the pertinent shipping agencies. Any discrepancies should be reported immediately to the Customer Service Department at TC Communications, Inc @ (949) 852-1973.

Equipment Location

The TC8530 should be located in an area that provides adequate light, work space, and ventilation. Avoid locating it next to any equipment that may produce electrical interference or strong magnetic fields, such as elevator shafts or heavy duty power supplies. As with any electronic equipment, keep the unit from excessive moisture, heat, vibration, and freezing temperatures.

Dry Contact Alarm Relay

A terminal block connector at the rear panel of the optical board provides for the Dry Contact Alarm Relay (between the "Reset" button and the RJ-11 connectors - see Figure 3 on page 9). Normally in the OPEN position, any alarm condition will force the relay switch to the CLOSED position (the "Alarm" LED will light and the audio buzzer will sound). This relay can be used in conjunction with an external device to monitor the TC8530's operation. The alarm switch will only be activated when the TC8530 is under a true alarm condition; it will not be activated when the unit is in a diagnostic (test) mode.

This function can be disabled by setting the front panel switch 1 "DIS ALM" to "down" (on) position on the optical card.

Power Supply

The TC8530 unit is powered via rear panel's connector. There are two pairs of connectors ("PWR A" and "PWR B") for power redundancy. Depending on the power option ordered, it could be one of following: 12VDC standard or optional 24VDC power supply. When AC power is ordered, a universal external power adapter is supplied which can support AC 90 VAC to 240 VAC and 50 Hz to 60 Hz. When unit contains more than one card, only one pair of power connectors needed to connect to a power source.

Alternate power sources are available as an option (see Chapter 7 - Specifications).

Data Signal Connection

As Figure 3 on page 9 illustrates the upper (data board) uses RJ-11 connectors & the lower (optical board) uses RJ-45 connectors to connect the data signals.

For virtual RJ-11 pin connections on the data board, refer to the Electrical Signal Interface Connections & Pin Assignments on page 19.

For virtual RJ-45 pin connections on the optical board connectors (AUX1 - AUX4), refer to page 23.

Ethernet 10/100Base-T Signal Connection

The lower (optical) board as illustrated on Figure 3 on page 9 an RJ-45 female connector provides for the electrical connection for the 10/100Base-T signal.

System Start Up

When power is initially connected to the TC8530, all LEDs will flash for a few seconds and the audio buzzer will sound. Once the unit passes its power up diagnostic phase, the following LED status should be observed from the front panel:

Interface Board:

1. The POWER "A" and/or "B" LED should be lit (depending on which power jacks are connected).
2. The "Vcc" LED should be lit (indicating +5V voltage is derived from Power "A" and/or "B").
3. All other LEDs can be in a random state (either On or Off) as the TC8530 will set its LEDs accordingly once valid electrical and optical connections are present.

Optical Board:

1. The "Rx-A," ("RxB," on dual optic models) and "SYNC" LEDs will flash (indicating no optic signal connections).
2. The "ALM" major alarm will be lit (indicating no electrical or optic signal connections).
3. The "MSTR/SLVE" LED should be lit if the unit is set as Master. Off when set to Slave. The units will be factory preset.
4. The "Vcc1" & "Vcc2" LEDs should be lit (indicating +5V voltage is derived from the power supply).
5. All other LEDs can be in a random state (either On or Off) as the TC8530 will set its LEDs accordingly once valid Ethernet and optical connections are present.

Installation Procedure Summary

The TC8530 is designed for quick and easy installation. Before installing, however, double-check the LED settings on each of the channels on the interface board and the DIP switches on the optical board to verify that they are in the correct positions.

1. By factory default one TC8530 will be set to be a Master unit with IP: 192.168.254.123 and a second to be a Slave unit with IP: 192.168.254.124. After you verify that you have one of each by noting the MSTR/SLVE LED on the front panel, refer to the front panel diagram on Figure 2, page 9 (MSTR/SLVE LED: On lit, means unit is set as a Master with and Off, means unit is set a Slave unit, power up the units.

Note 1: If the units are both set as Masters or Slaves, they must be changed to have one as a Master and one as a Slave unit using the Software configurations, please refer to page 32.

2. Connect fiber optic cables between the local & remote units; the local unit's optic "TxA" connects to the remote unit's optic "RxA" (and "TxB" to "RxB" on dual optic models). Observe that the "SYNC" (and "USE-B" on dual optic models) LEDs lights solid when a good optic connection is present.
3. For Ethernet (10/100Base-T) signals, connect the Cat5 or Cat5E cable proving the Ethernet signal to the RJ-45 connector on the rear panel on the optical board on the TC8530. Observe that the 100M, FULL LEDs are lit, and the LNK/ACT LED is flashing.

   If the Ethernet signal is 10Base-T and half duplex, the 100M and FULL LEDs should be off. If the Ethernet signal is 100Mbps and full duplex, the 100M and FULL LEDs should be lit.
4. Verify System Integrity:

   At each unit, check that the "SYNC" and Rx-A ("Rx-B" and "USE-B" on dual optic models) LEDs lights solid indicating good optical connections.

   Verify and record the optical cable loss for each link in the application after installation is complete. This reading will both verify the integrity of the circuit and provide a benchmark for future troubleshooting efforts (see Chapter 3 - Troubleshooting).

Typical Ethernet and Data Application Diagram

The TC8530 can be used to extend Ethernet or data lines from a local site to a remote location via fiber optic cable.

Note: By default, one and only one of the units **will** be set as Master and the second as a Slave. The MSTR or SLVE LED will be lit on the front panel to indicate which unit is set as Master and which is set as Slave.

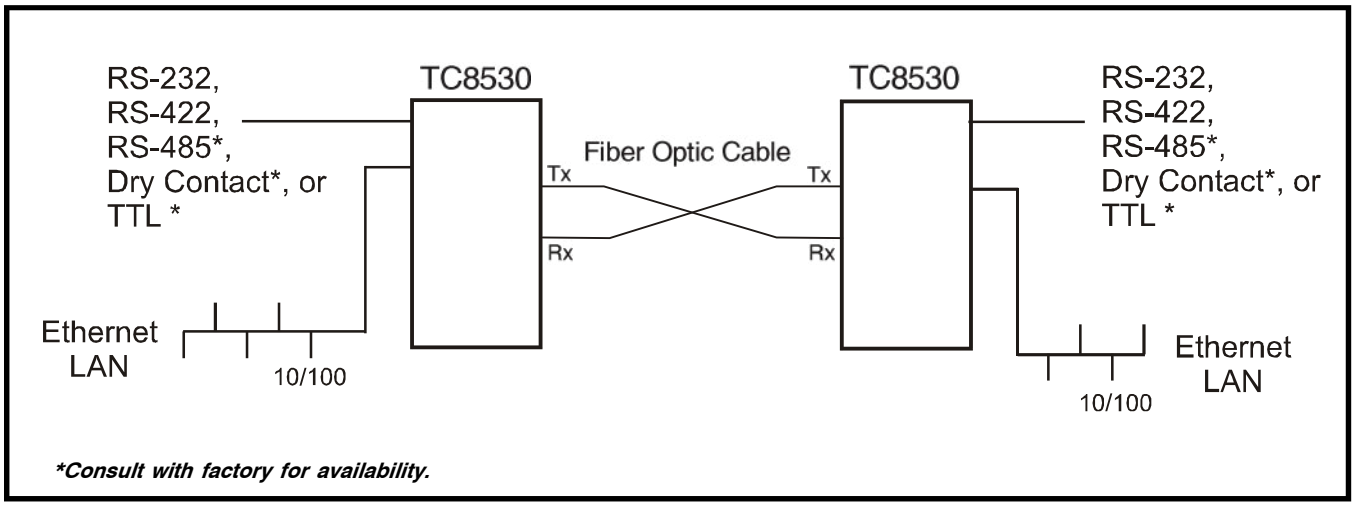

Figure 6. TC8530 Typical Application Diagram

The RJ-11(on Interface card) & RJ-45(on Optical card) connectors are located on the back of the TC8530s.

RJ-11 Pin Assignments for Interface Card Channels (CH1-CH8)

RS-232 (Async & Async with Control)

For RS-232, pin 5 is the input (TxD) pin while pin 4 is the output (RxD) pin. A separate channel on each RJ-11 port is available on pin 3 and pin 2 (for Async with Control or Sync interfaces). The second channel can be used as control (or handshake) signals or Tx Clock and Rx Clock signals for RS-232 synchronous applications.

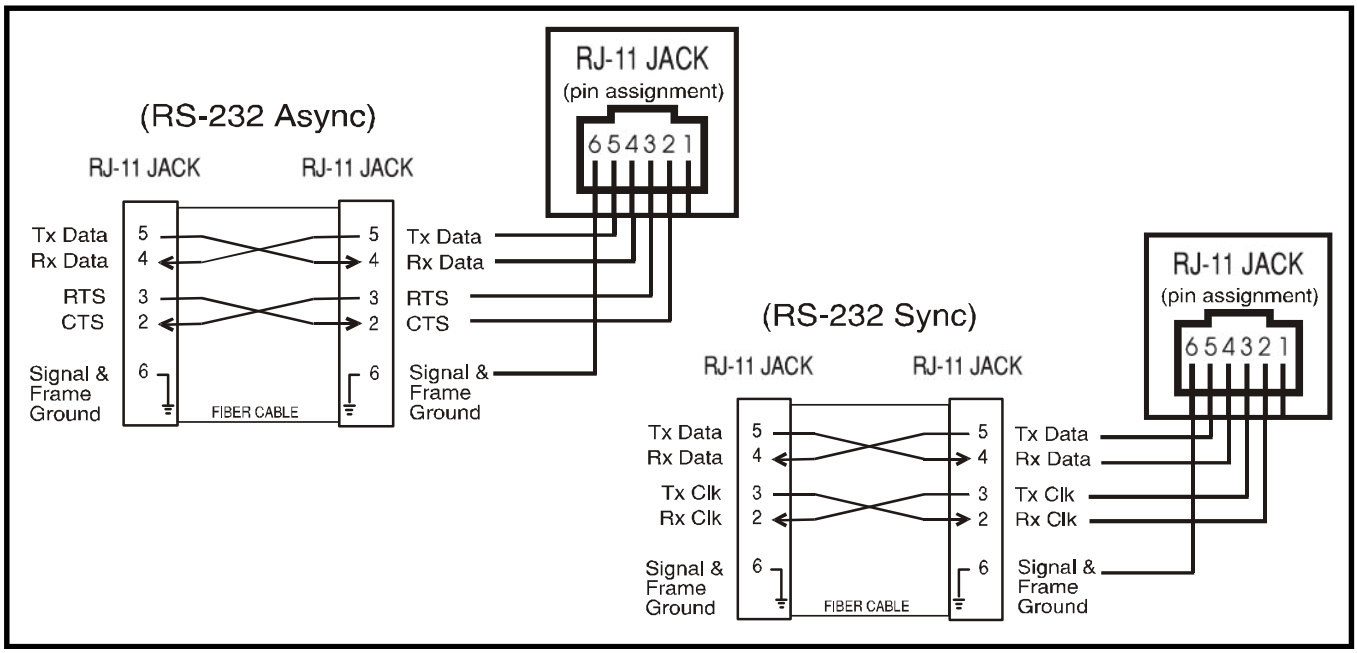

Figure 7. RS-232 Async Pin Assignments & Virtual Connection Diagram

RS-422/RS-485 Asynchronous

For RS-422 & RS-485 interfaces, pins 2 and 5 are balanced input pins. Pin 2 is the positive input (TxD+) while pin 5 is negative (TxD-).

Pins 3 and 4 are balanced output pins. Pin 3 is the positive output (RxD+) while pin 4 is negative (RxD-). Either pin 6 or pin 1 can be Signal Ground.

Only RS-422/RS-485 Async communications can be used with the TC8530 due to the limited number of pins on the RJ-11 connector.

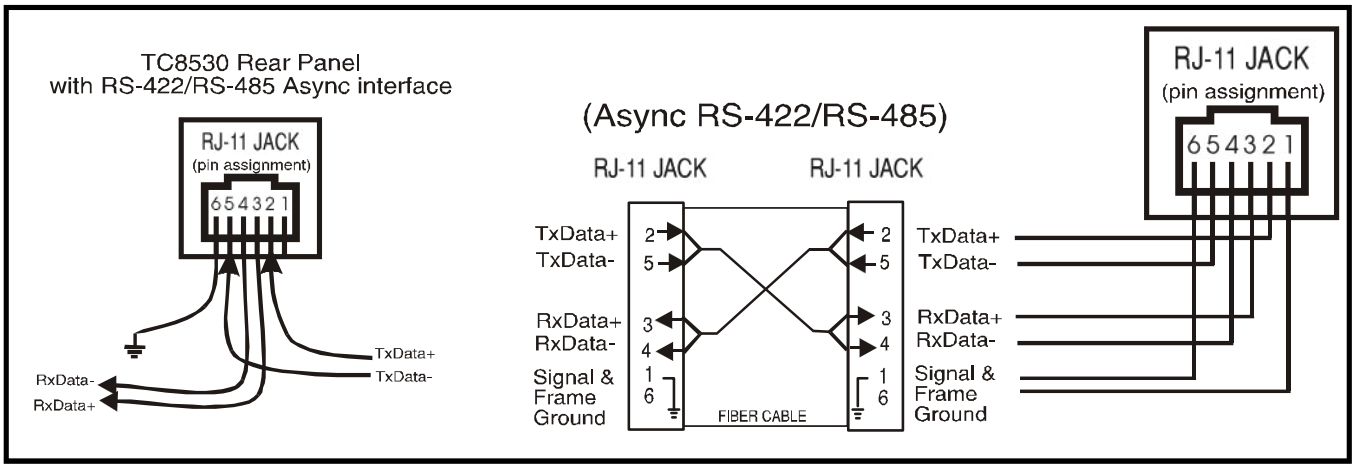

Figure 8. RS-422/RS-485 Async Pin Assignments & Virtual Connection Diagrams

RS-485 (2 wire) Electrical Signal Interface Connection & Pin Assignments

The RJ-11 connectors are located at the rear panel of the TC8530 Interface card.

Two wire (Half Duplex) RS-485 Asynchronous

For two wire RS-485, use pins 3 and 4.

Either pin 6 or pin 1 can be Signal Ground.

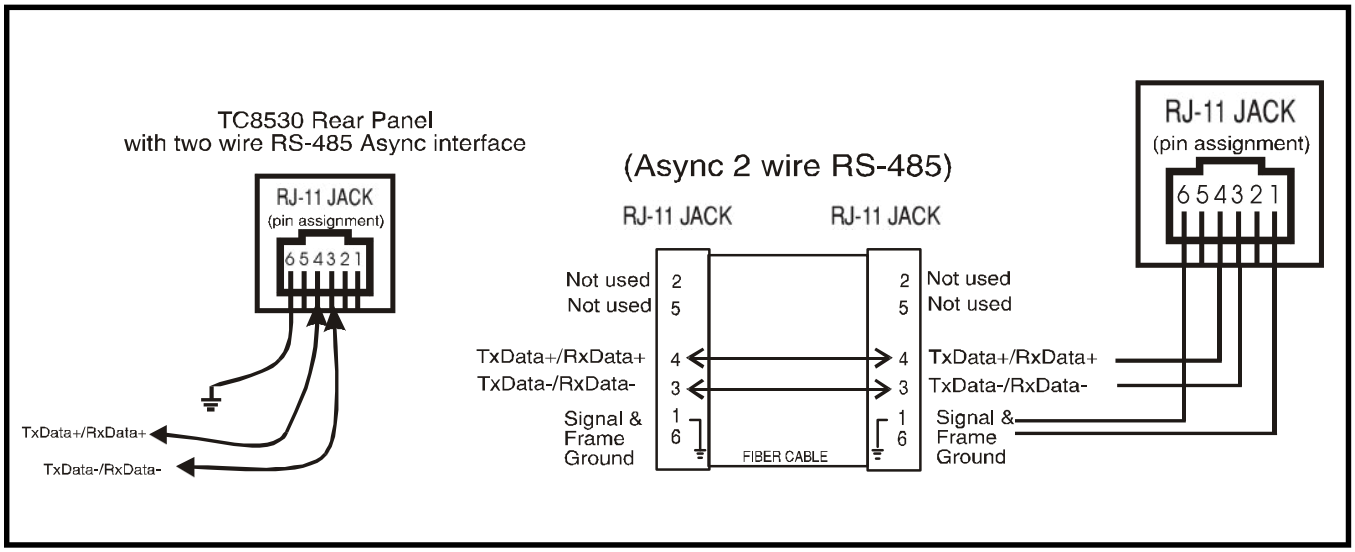

Figure 9. Two wire RS-485 Async Pin Assignments & Virtual Connection Diagrams

Intercom & Analog Interfaces

For Voice and audio channels, pin 5 is transmit TIP & pin 2 is transmit RING (the signal from the handset's mouth piece). Pin 4 is receive TIP & pin 3 is receive RING (the signal that goes to the handset's ear piece). Similarly, pin 5 on an intercom channel is MIC+ & pin 2 is MIC-, while pin 4 is SPKR- and pin 3 is SPKR+.

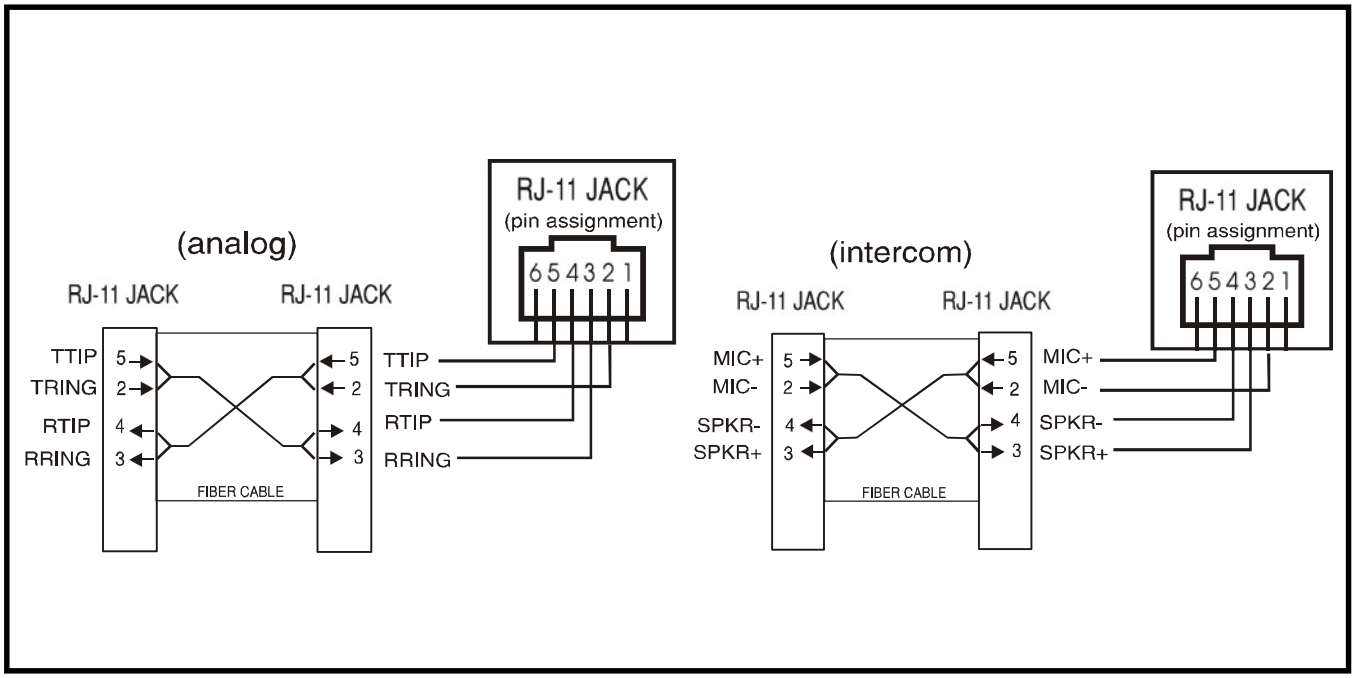

Figure 10. RJ-11 Analog and Intercom Pin Assignments & Virtual Connection Diagrams

TTL Asynchronous

Similar to the RS-232 interface, the TTL interface utilizes pin 5 for the input (TxD) pin while pin 4 is the output (RxD) pin.

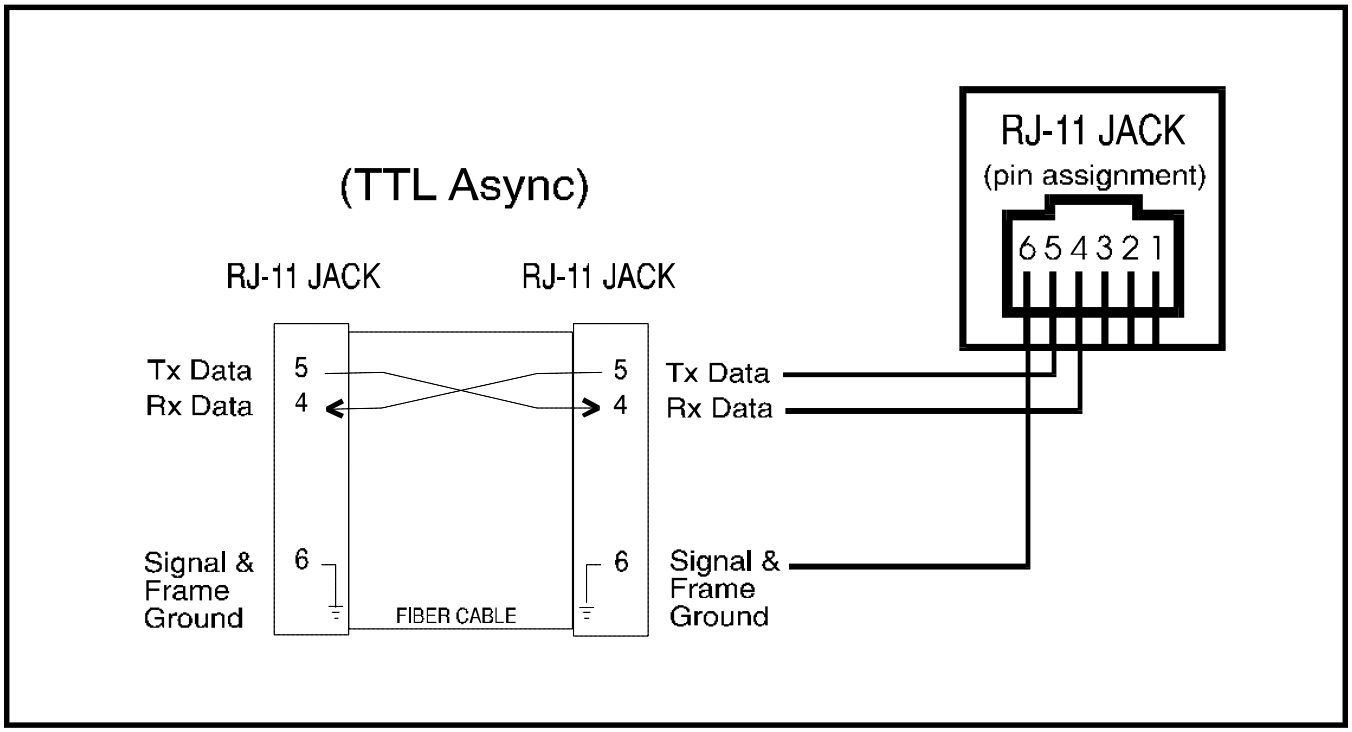

Figure 11. RJ-11 TTL Async Pin Assignments & Connection Diagram

Dry Contact Closure Detector & Relay Switch (optional)

For dry contact closure applications, only uni-direction transmission is allowed. The transmitter side has a dry-contact closure detector as shown in the diagram below.

The receiver side has a dry-contact closure relay switch. The "close" and "open" status is controlled by a relay switch inside the TC8530. It reflects the remote detector's "on" and "off" status.

As illustrated below, when the RJ-11's pin 4 and pin 5 are closed at the transmitter side, the status is reflected at the remote receiver's side. The relay switch on the receiver's side is rated 0.5A DC switching current, with a max load rating of 10VA.

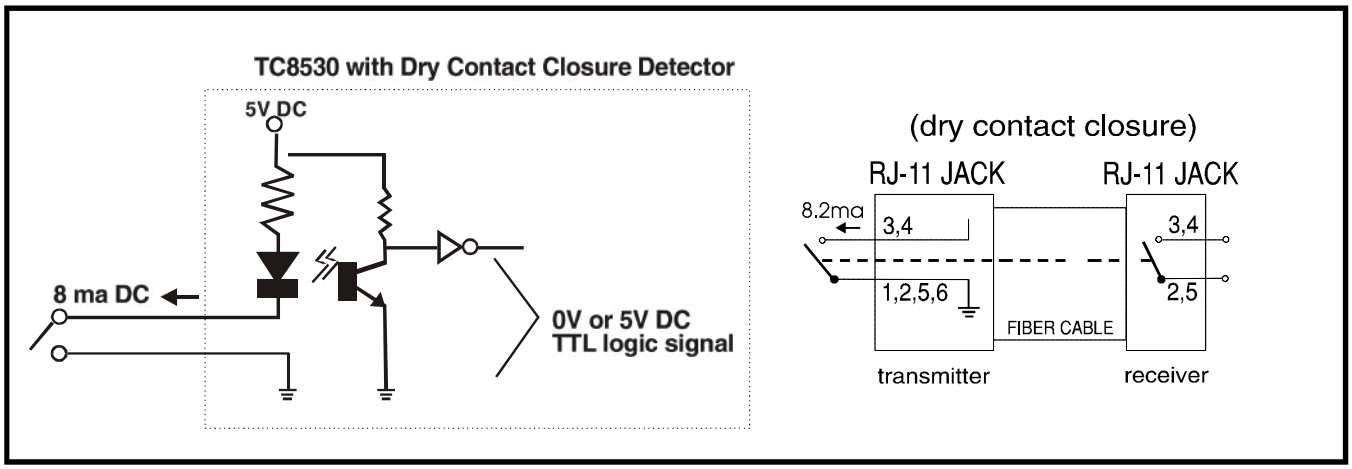

Figure 12. Dry Contact Detector and Closure Logic Diagrams

RJ-11 to DB25 Female (Async) Connection Cables

The user's device can be a DCE or DTE device (which may have a DB25 male connector). The following illustrations depict the RS-232/TTL & RS-422/RS-485 wiring diagrams for constructing an RJ-11 to DB25 Female adapter cable.

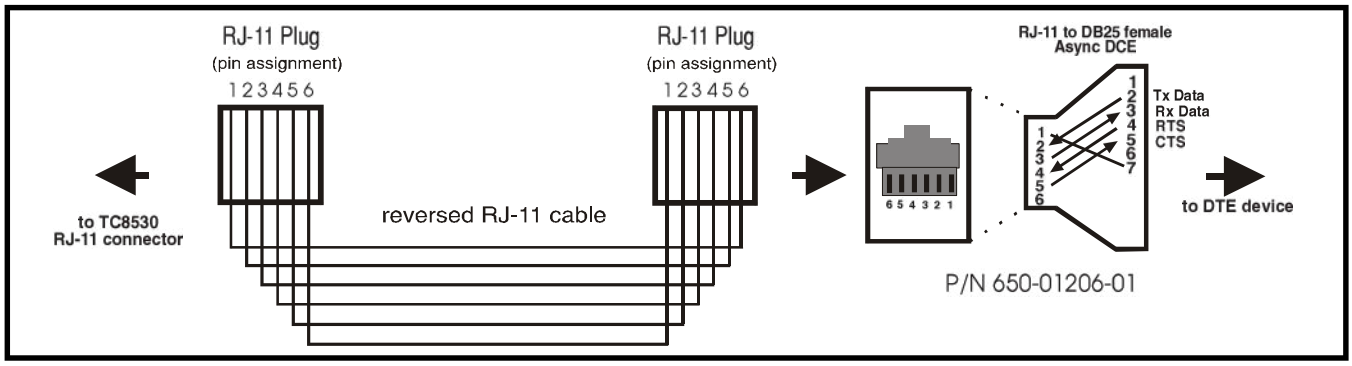

Figure 13. RJ-11 (ASYNC DCE) Pin Assignments & Connection

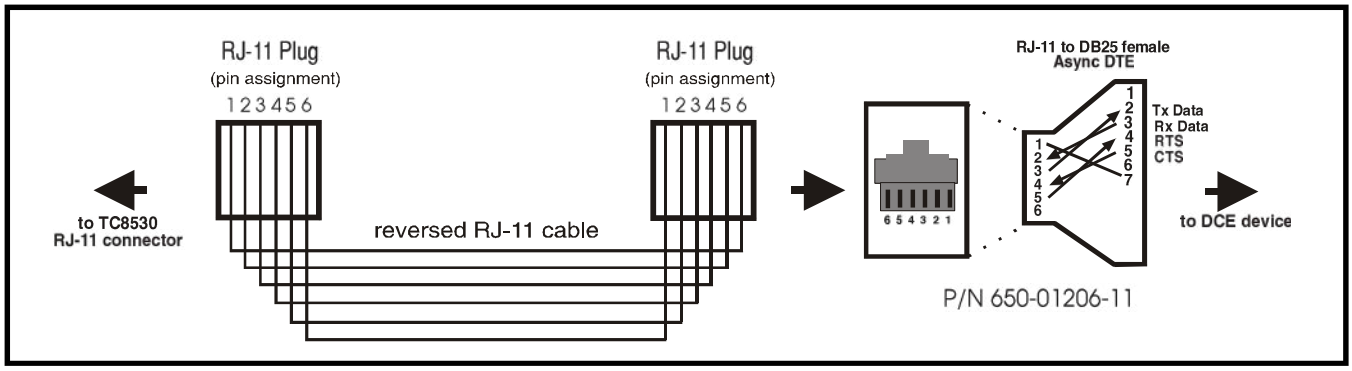

Figure 14. RJ-11 (ASYNC DTE) Pin Assignments & Connection

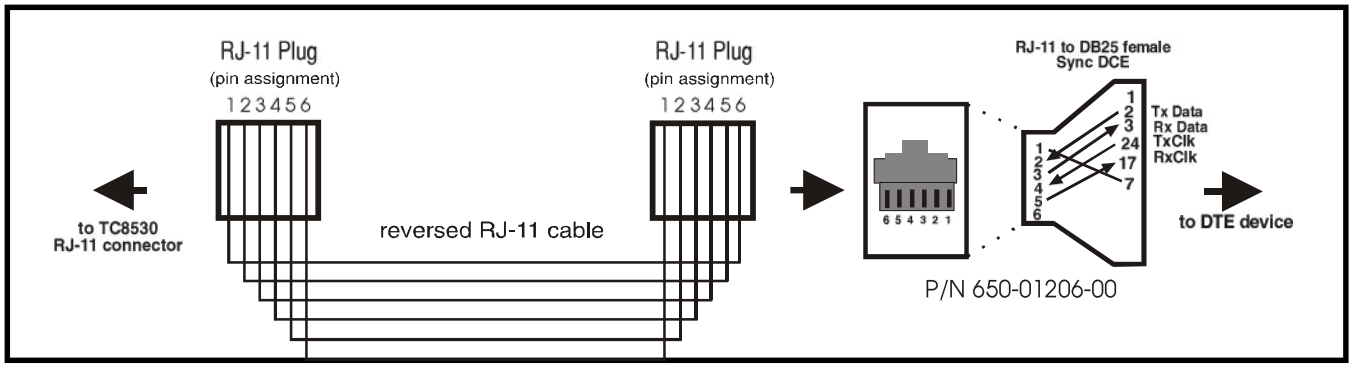

Figure 15. RJ-11 (SYNC DCE) Pin Assignments & Connection

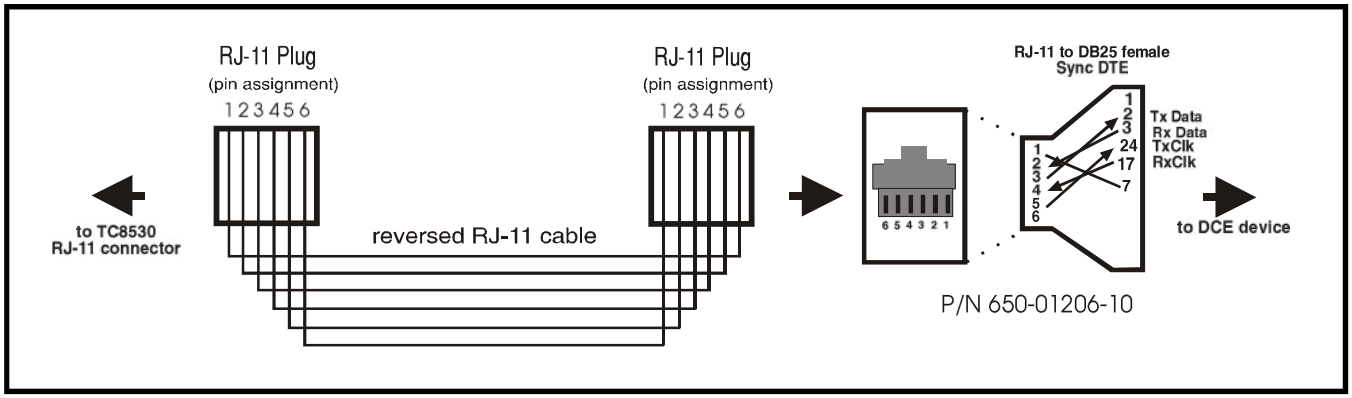

Figure 16. RJ-11 (SYNC DTE) Pin Assignments & Connection

RJ-11 to DB25 Female (Async) Connection Cables (Cont.)

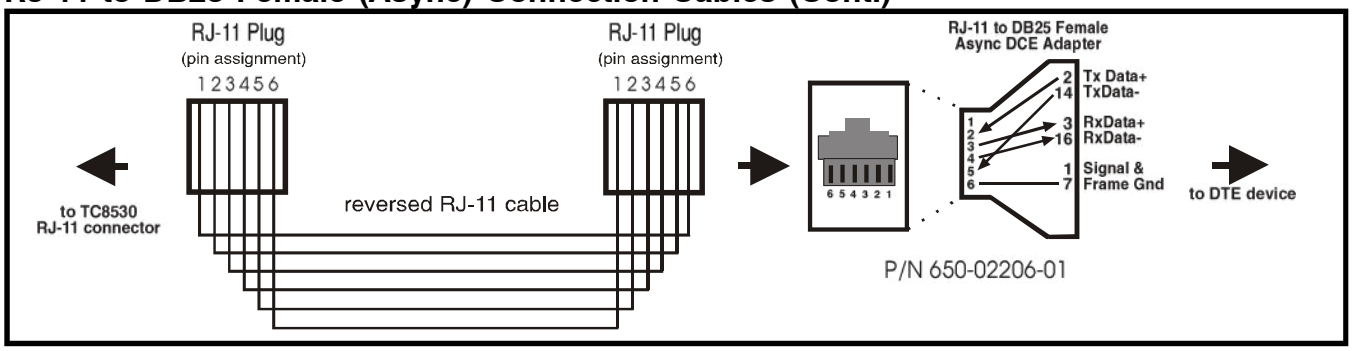

Figure 17. RJ-11 (ASYNC DCE) RS-422/RS-485 Pin Assignments & Connection

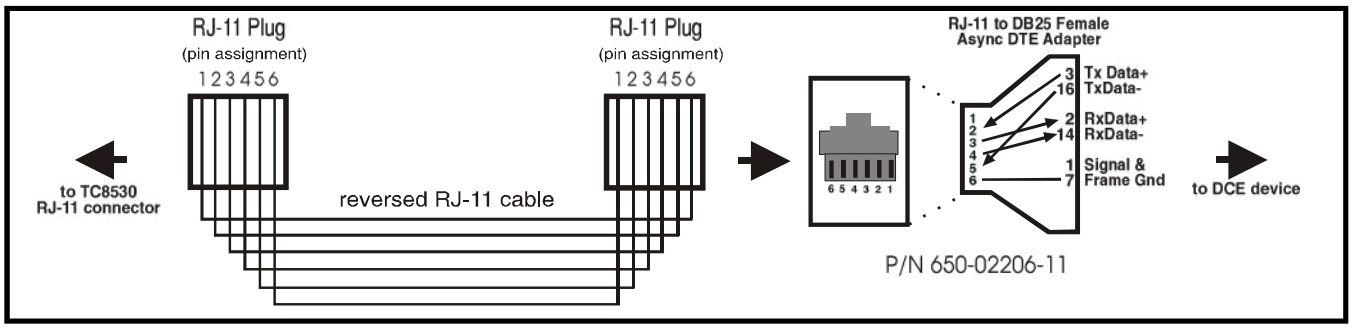

Figure 18. RJ-11 (ASYNC DTE) RS-422/RS-485 Pin Assignments & Connection

RJ-45 Pin Assignments for Optical Card Channels (AUX1-AUX4)

There are eight pins in an RJ-45 Jack. The outer pins 1 & 8 are not used. The pin numbers are assigned as follows:

When looking into the Female RJ-45 jack, the copper contact pins are at the upper side, pin "1" is on your left side.

For RS-232, the pin assignments are as follows:

For RS-232, the pin assignments are as follows:

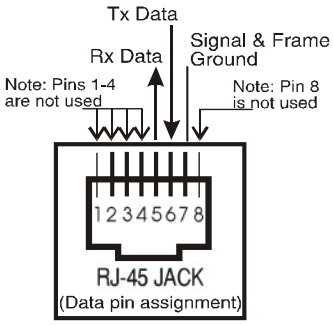

RS232 w/o handshake

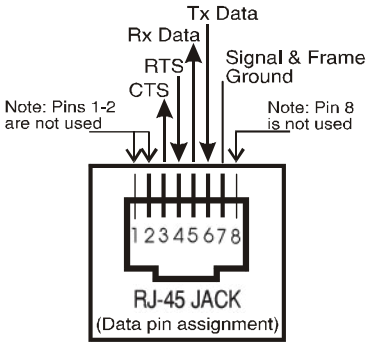

RS232 with handshake

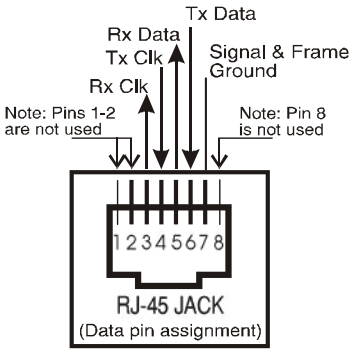

RS232 Sync

For RS-422/RS-485*, the pin assignments are as follows:

RS-485*(Contact factory for availability). For RS-422 without handshake signals, the pin assignments are as follows:

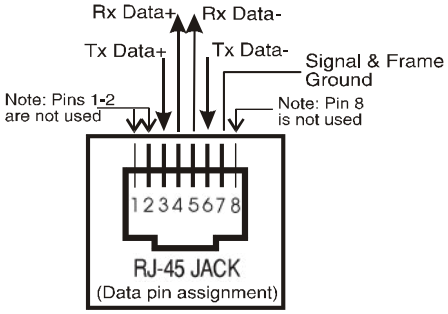

RS422/RS485* 4-wire Async

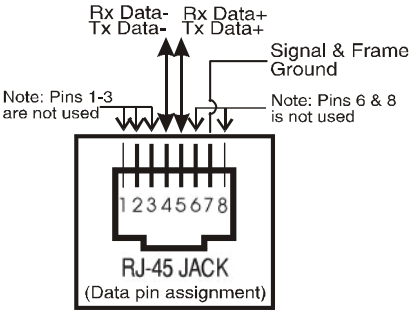

RS485* 2-wire Async

Chapter 3 - Troubleshooting

General

Alarm conditions occur whenever an optical or electrical problem or "fault" conditions are detected by the TC8530.

The Ethernet 100M, & FULL LEDs on the optical board should be Off, if the Ethernet signal is 10Base-T and half duplex. If the Ethernet signal is 100Mbps and full duplex, the 100M and FULL LEDs should be lit and the LNK/ACT LED should be flashing as it detects Ethernet activity.

All LEDs are Off

If no LEDs are lit on the unit, check the DC power supply, connector plug, and/or the power source. If the problem persists, contact the Technical Support Department at TC Communications, Inc @ (949) 852-1973.

"ALM" LED on the Optical Board

When an alarm condition is detected, the "ALM" LED will light, the audio buzzers will sound, the dry contact relay will close, and one or more additional LED will light or flash. The following fault conditions will cause the alarm to be triggered on the optical board:

1. Optic signal lost from "RxA" (or "RxB" on dual optic models).
2. Optic signal is marginal, which causes invalid data packets to be received; the "Rx-A" (or "Rx-B") LED will be flashing.
3. The remote unit lost power.

Optic Cable Types

Conventionally, fiber optic cable with yellow-colored insulation is used for Single Mode applications; gray or orange-colored insulated cable is for Multimode use. If Multimode cable is used in a Single Mode application, the test results could be erroneous and confusing.

Calculating the Loss on the Fiber

The fiber optic link and/or connectors are frequently the source of various problems. Check out the connectors and the integrity of the link first. Ideally, the link should be calibrated for total loss after the installation has been completed. This will accomplish two things: (1) it will verify that the total loss of the link is within the loss budget of the device and (2) it will provide a benchmark for future testing. For example, a system that has been tested as having 6dB total loss when installed and suddenly tests out as having a loss of 10dB probably has a connector or link problem.

These are the reference values we use to calculate the loss on the fiber:

Multimode 850nm	**:**	**3 dB loss per km on 62.5/125μm cable***
Multimode 1310nm	**:**	**2 dB loss per km on 62.5/125μm cable***
Single Mode 1310nm	**:**	**0.5 dB loss per km on 9/125μm cable***
Single Mode 1550nm	**:**	**0.25 dB loss per km on 9/125μm cable***

These numbers are listed for reference only. We recommend an OTDR reading be used to determine actual link loss.

Chapter 4 - Bench Tests

General

It is highly recommended to conduct bench tests before actual installation. Bench testing allows the user to become familiar with all the functions and features of the TC8530 in a controlled environment. Knowledge of these functions and features will ease installation and troubleshooting efforts later on.

Local Loopback Test

For loopback tests on the eight channel data Interface card or four channel Optical card, the following applies:

Enable the LOCLB front panel dip switch on the Interface or Optical card to the On (right or down) position and a valid electrical signal from the customer's device or tester present at the RJ-11 or RJ-45 (depending on which channels are being used), the incoming signal will be looped back and sent back to the customer's device or tester. The "IN," "OUT" and "LB" LEDs will light solidly. The "ALM" LED will flash, indicating that the unit is in diagnostic mode.

The loopback is formed inside the TC8530, after the input signal is converted to the TTL level. The purpose of this test is to verify the interface's input and output connections, signal input receiver and signal output driver.

Upon completion of this test, return the LOCLB switch to the Off (up or left) position.

Remote Loopback Test

For remote loopback tests on the eight channel data Interface card or four channel Optical card, the following applies:

Connect the fiber optic cables from the local TC8530 to the remote TC8530 unit as shown on the diagram below. Apply a valid electrical signal at any of the RJ-11 or RJ-45 connectors on the rear of the local unit (depending on which channels are being used). The "IN" LED on the local unit should be lit and the "OUT" LED on the remote unit should be lit on the corresponding channel connected to.

Enable the RMTLB front panel dip switch on the Interface or Optical card to the "On" (Right or Down) position on the local unit, the optic signal received at "RxA" or "RxB" will be looped back to the transmitter ("TxA" or "TxB"). Both "IN" and "OUT" LEDs will be solidly lit on both the local and remote units on the corresponding channel connected to. The "LB" LED on the local unit will be lit and the "ALM" LED will flash, indicating that the unit is in diagnostic mode. This test will verify the optic transmitters, receivers and the optical link between units.

Upon completion of this test, return the RMTLB switch to the Off (up or left) position.

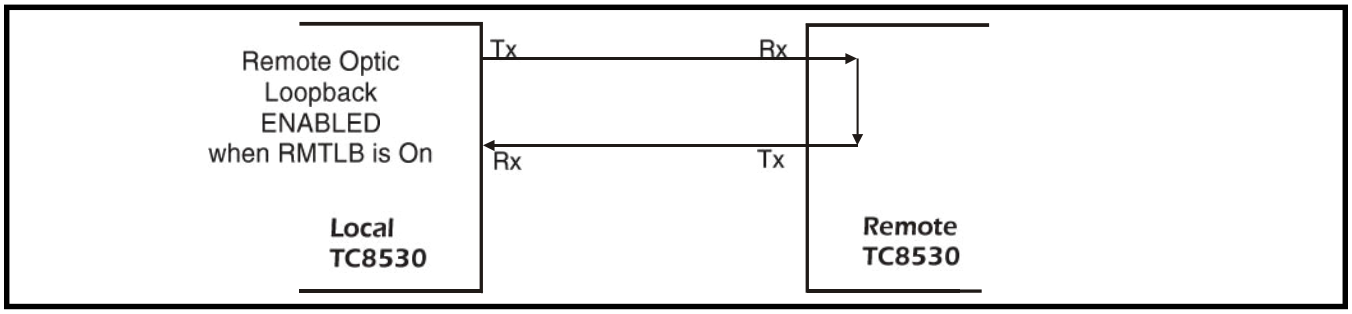

Figure 19. Remote Loopback Logic Diagram

Ethernet/Web Page Test

The purpose of this test is to verify Ethernet channel and accessibility to the web page using a PC.

1. Power on the units and configure the IP address on the units, refer to Chapter 5.
2. Connect the fiber optical cables from the local to remote unit and vise versa.
3. Verify that the Sync LED is lit.
4. Connect one of the TC8530 units to a PC to access the web page using the a web browser (enter the IP address configured in step 1).
5. You should be able to access to local and remote TC8530 unit's web page while connected to the local unit.

Chapter 5 - Software Configuration

Configure your TC8530

Software configuration is done through the management web page by connecting to the RJ-45 Port on the rear. Configuring the TC8530 using the web page will overwrite the current hardware settings. The new settings will reflected on the front LED's.

In order to configure the TC8530 set to default, the user needs to use a PC with a web browser installed. The default IP address is: 192.168.254.123. The PC's IP address must be set within the range of 192.168.254.1 to 192.168.254.254, and with a Network Mask of 255.255.255.0. If your PC does not have a compatible IP Address and Network Mask, or you are not sure about the settings, refer to the "PC IP Configuration" section on page 40 for more detail.

To configure the TC8530, simply enter the IP address of the TC8530 in the Web browser's address box. For Example, http://192.168.254.123.

(**Attention**: Contact your network administrator if you are unsure about the settings. Improper settings may result in disruption of the existing network.)

Once you enter the IP address and click Enter, you will see a verification window, where you will be prompted to enter a username and password:

enter ***admin*** under User Name and enter ***password*** under Password and click "OK."

You will then see the following window as in figure 20, below. This summary page will show you the current configuration and the status of the TC8530 media converter. You can also enable the functions of the DIP switches from the optical board shown towards the bottom of the dialog box.

Figure 20. TC8530's Base Board Summary

Use the links at the left of the page to navigate to the desired section.

The dialog box below, shows the data "IN" and "OUT" status for the Interface (Expansion) board channels 1-8 when optional data channels are ordered. The corresponding status for each channel on this dialog box, will also be visually indicated by the front panel LEDs.

Note: The data "IN" and "OUT" status for the Optical (Main) board channels (AUX1..AUX4) will be shown on the Base Board Summary page. (see figure 20).

On this dialog box, figure 21, you can enable the diagnostic SIG GEN function as shown for the Expansion board. To enable the function, click on the "SigGen" button (the status will show "On"). To disable the Sig Gen function, click again on the "SigGen" button (the status will show "Off").

The purpose of the signal generator test is to verify that the fiber link is good.

The unit will generate a pulse signal to emulate an electrical transmission signal. By verifying the "IN" & "OUT" channel LEDs on the unit, the user may confirm that the optical link is good.

1. Power up two of the TC8530 units to be used for testing and access one of them via the web browser (refer to Chapter 5). Click on the "Expansion board" link at the left side of the page.
2. Use two short optic jumper cables to connect from the local unit's TxA to remote unit's RxA and RxA from local unit to TxA of remote unit. Once a valid optic signal is received, the "SYNC," and "RxA" LEDs should light solidly and the Alarm LED should turn off.
3. Enable the Sig Gen function by clicking the "SigGen" button. The "IN" LEDs on the local unit will light sequentially. On the remote unit, the "OUT" LEDs will light respectively.
4. Upon completion of this test, disable the Sig Gen function by clicking the "SigGen" button.

Note 1: On the Interface (Expansion) board the following function "SIG GEN" can only be enabled through web configuration and cannot be enabled by hardware.

Note 2: The Signal Generator function only applies to the eight channel data Interface board.

Note 3: For the units to function properly, all the diagnostic functions must be disabled or Off.

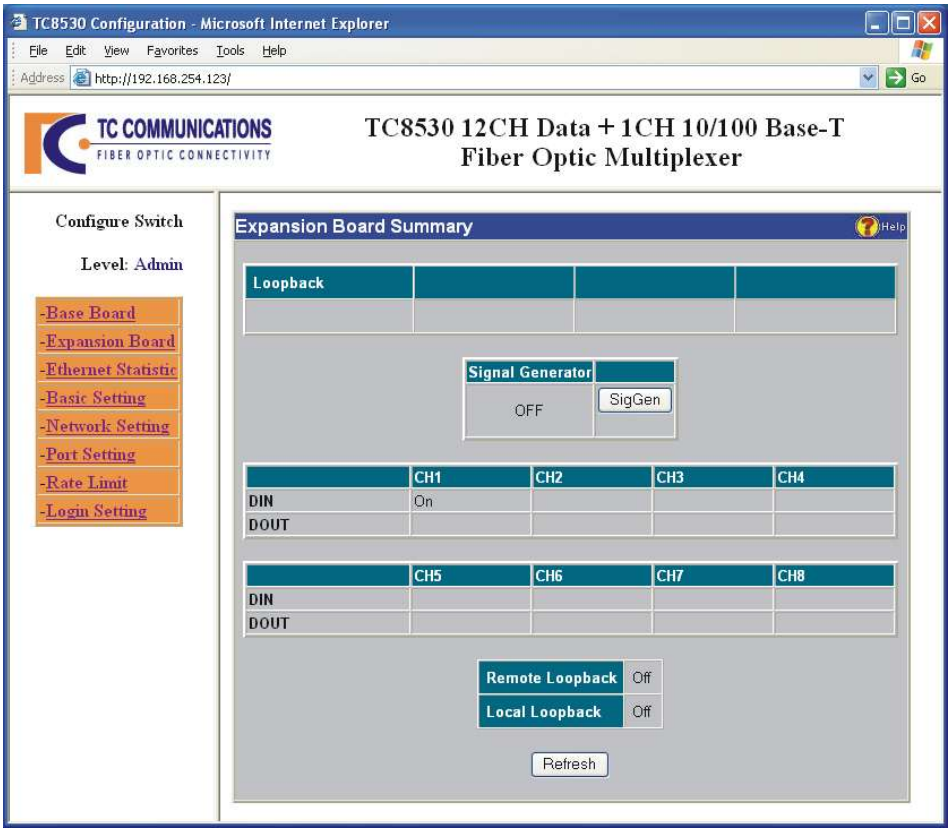

Figure 21. TC8530's Data/Diagnostic Status Indicators

Ethernet History Statistics

The "Ethernet Statistic" link on the left side of the page is used to monitor the status of the bandwidth usage of the Ethernet Port of the media converter.

For example:

Click the "Ethernet Statistic" link on the left side of the page. You will see the page as in figure 22, below. It will show the bandwidth status and history and/or event of the Ethernet port.

1. On the "Current Rate" section, you can monitor the current Rx Frames/sec, Rx Bytes/sec, Rx BU %, Tx Frames/sec, Tx Bytes/sec, and Tx BU %.
2. On the center of the window you will see "History counter record every "30" minute(s)." You can set up your own preferred time intervals specified in the Basic Configuration window figure 24, on page 31.
3. The counters 1 through 24, each account for every 30 minutes that have been logged into the history. For example: Counter 1 = past 30 min, Counter 2 = past 2x30 min, Counter 3 = past 3x30 minutes...Counter 24 = past 24x30 minutes.
4. Use the "Refresh" link to update the new status of the port statistics.
5. You can use the "Clear History" button to clear the recorded counters. It will clear all the counters and start over again.

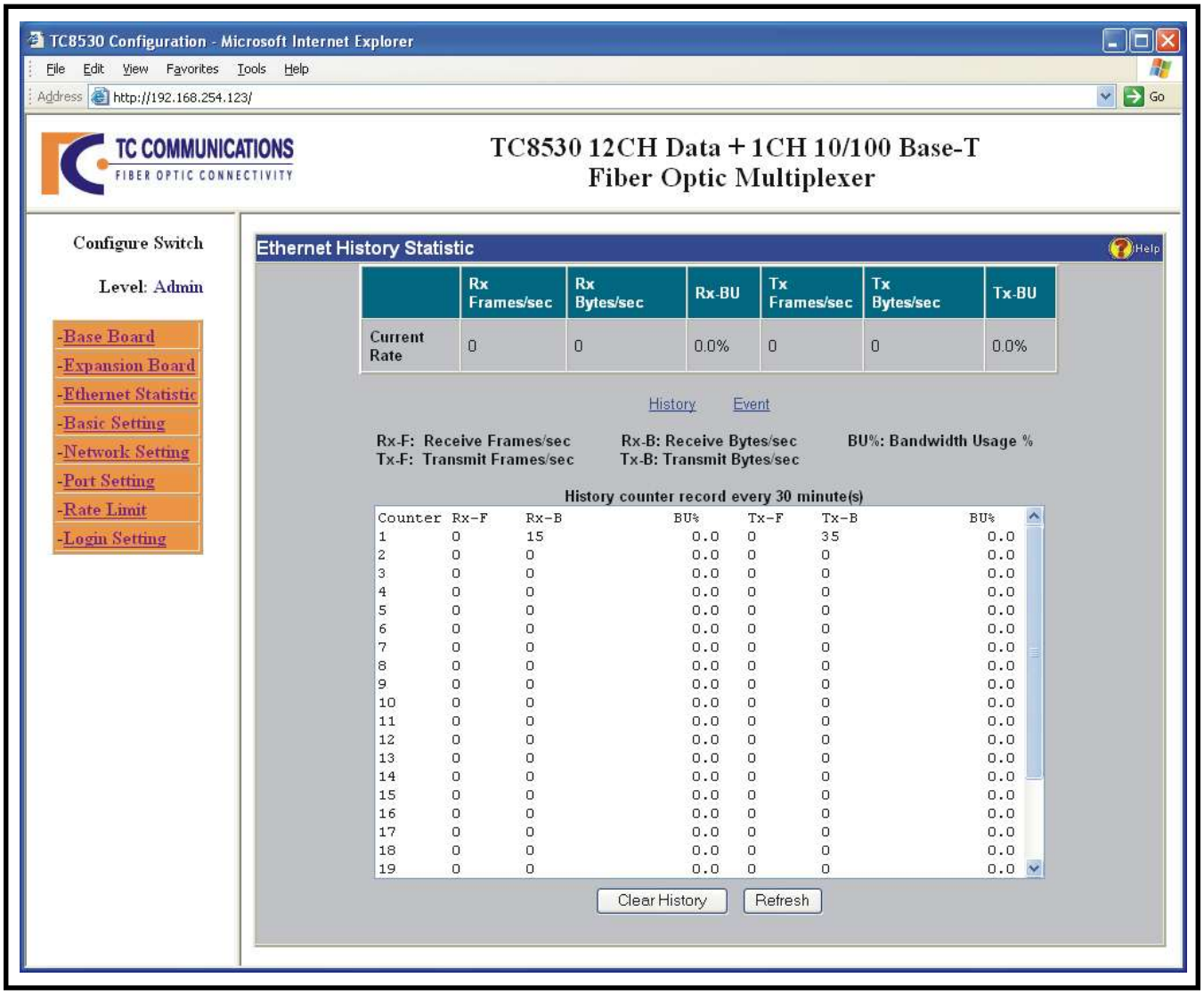

Figure 22. TC8530's Ethernet History Statistics

Ethernet Event Statistics

Click the "Ethernet Statistic" link on the left side of the page. You will see the window as in figure 22 on page 29. It shows the bandwidth status and history and/or event of the Ethernet port. Click on the "Event" link on the middle of the page and you should see the window as in figure 23 below.

It will show all the statistics of the Ethernet port activities.

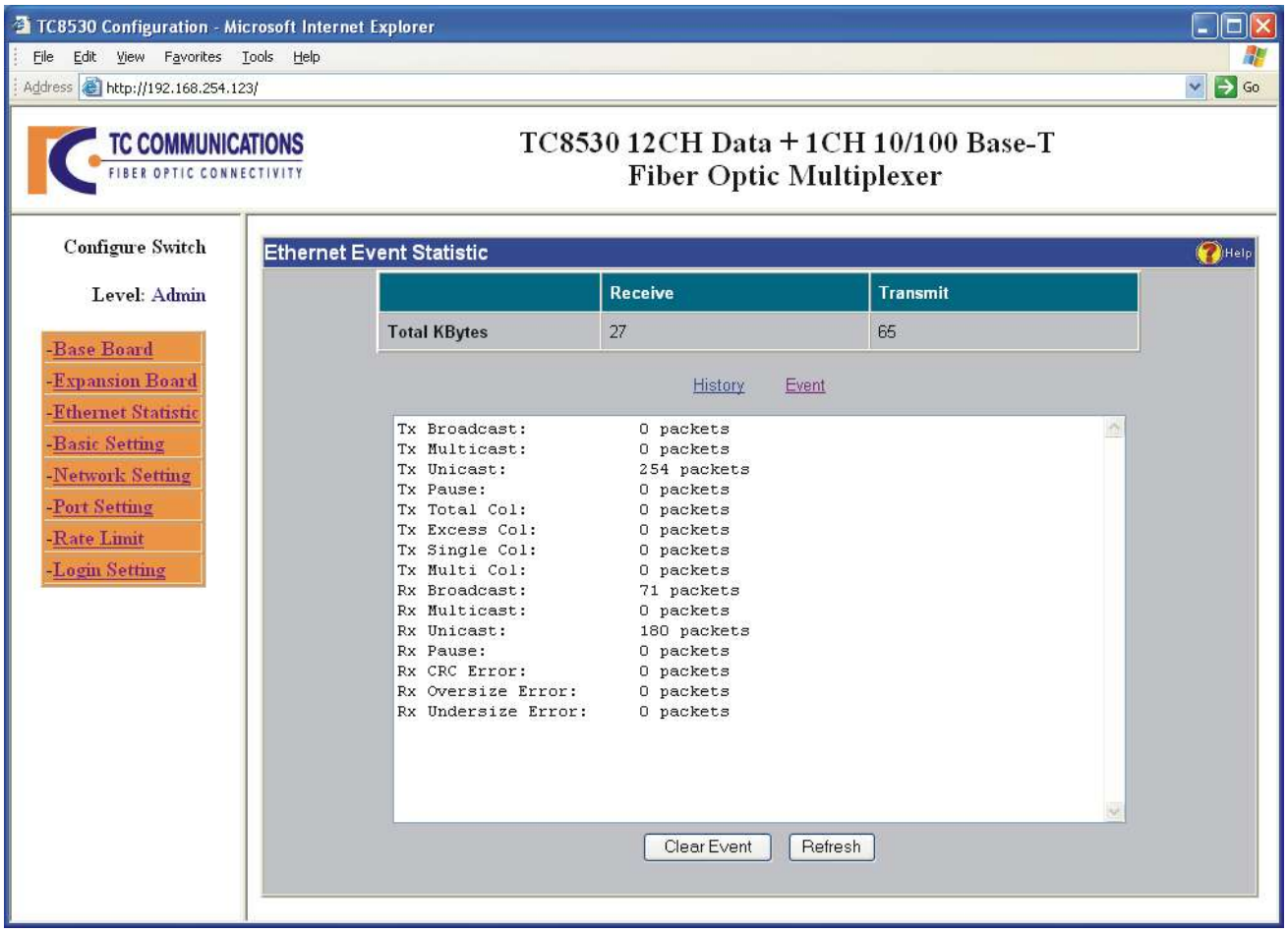

Figure 23. TC8530's Ethernet Port Event Statistics

Configure Basic Switch Settings

Click the "Basic Setting" link on the left side of the page and you will see the window as in figure 24, below and you can begin the configurations. You may change the values of the fields as you like.

The "Record Period" field is used to set the time intervals for history status purposes. You can set the time intervals anywhere from 1 minute to 120 minutes. The default interval is 30 minutes. There are 24 counters to record the BU% history. (See the "History counter record" example on figure 22, page 29).

Note: After you apply the new time interval setting, all the counters will be reset.

When done, click Apply to apply the new settings.

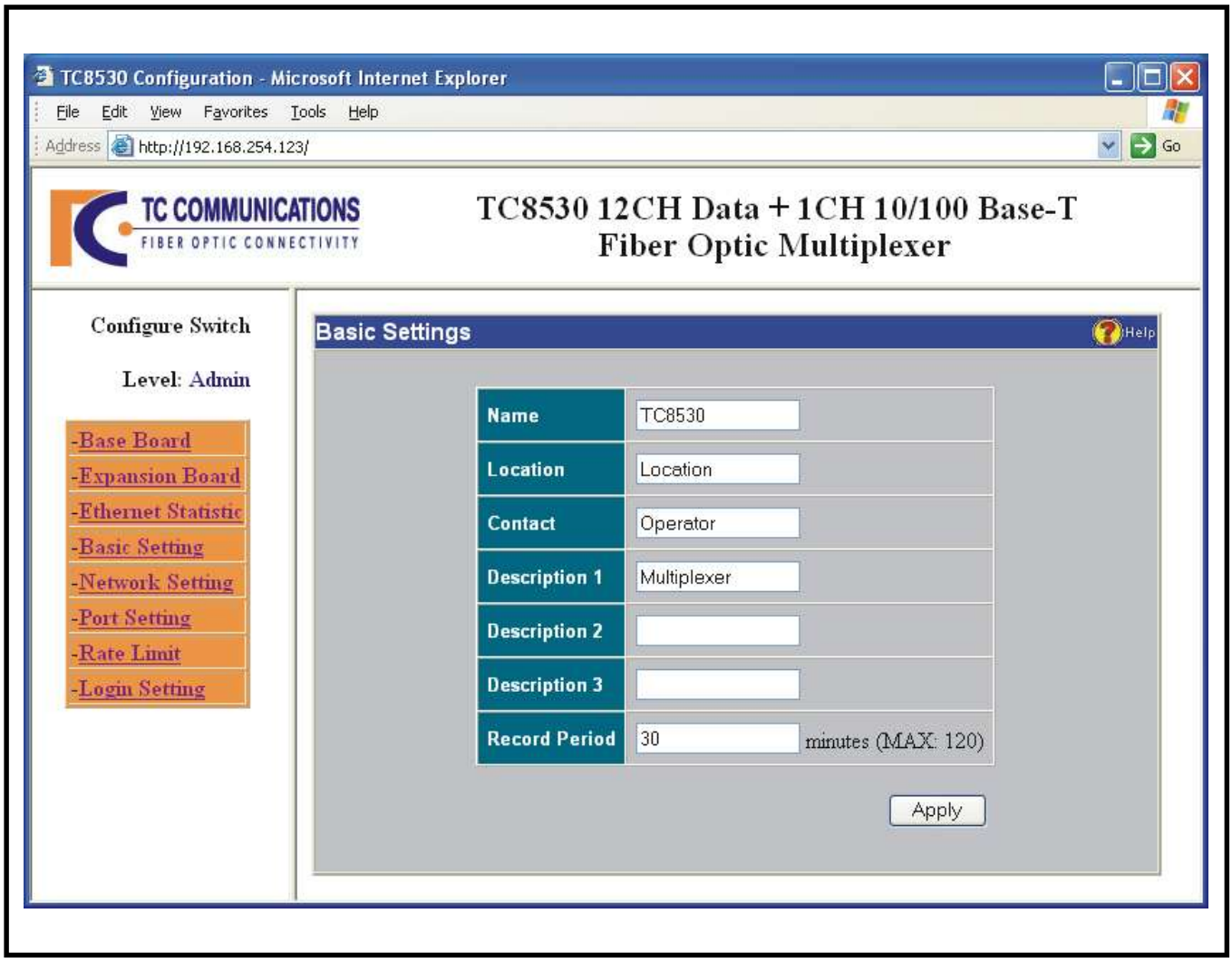

Figure 24. TC8530's Basic Configuration

Configure Network/IP Settings

Use the links at the left of the page to navigate to the desired section.

To configure the network settings, click the "Network Setting" link on the left side of the page. On the IP settings window, enter the IP address, Subnet Mask and Default Gateway as shown on figure 25, below.

Note 1: The TC8530 and the monitoring computer should be on the same network (Contact your network administrator for valid network settings). When done, click Apply to apply the new settings.

After you have applied the new IP settings on the TC8530, you must change your PC IP settings to be compatible with the new settings of the TC8530 unit and to be able to continue the configurations.

Note 2: To change the unit to Master or Slave mode, use the link "**Master/Slave Settings**" link shown on the dialog box below. You can monitor the applied change by noting the MSTR/SLVE LED on the front panel of the unit (MSTR/SLVE LED: On lit, means unit is set as a Master and Off, means unit is set a Slave unit). Hence, we must have a Master and a Slave unit for the link.

Warning: If both units in a link are setup as Masters or Slaves, it may cause the units to failure of operation of the units.

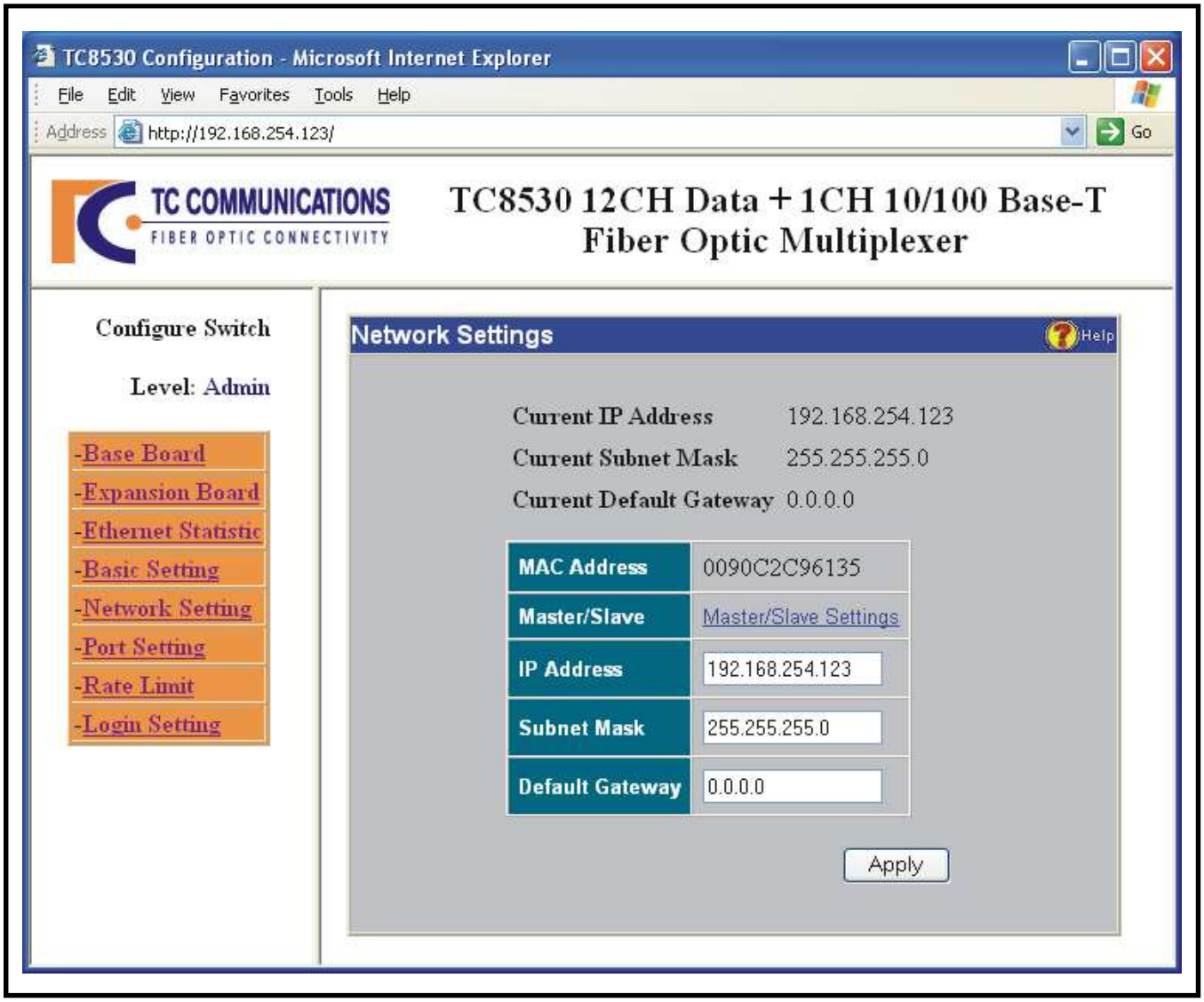

Figure 25. TC8530's IP Configuration

Configure Ethernet Settings

Click the "Port Setting" link on the left side of the page to configure the Ethernet Port Settings. After clicking the "Port Setting" link, you will see the following window shown on figure 26, below.

Port In Use: Enable or disable either the Ethernet port.

Speed/Duplex: The speed and duplex on the fiber port is fixed to 100M/Full. You can select the speed and duplex mode of the Ethernet port as follows:

Auto-Negotiating, 100Mbps/Full Duplex, 100Mbps/Half Duplex, 10Mbps/Full Duplex, or 10Mbps/Half Duplex.

Current Status: It shows the current port status for the Ethernet Port.

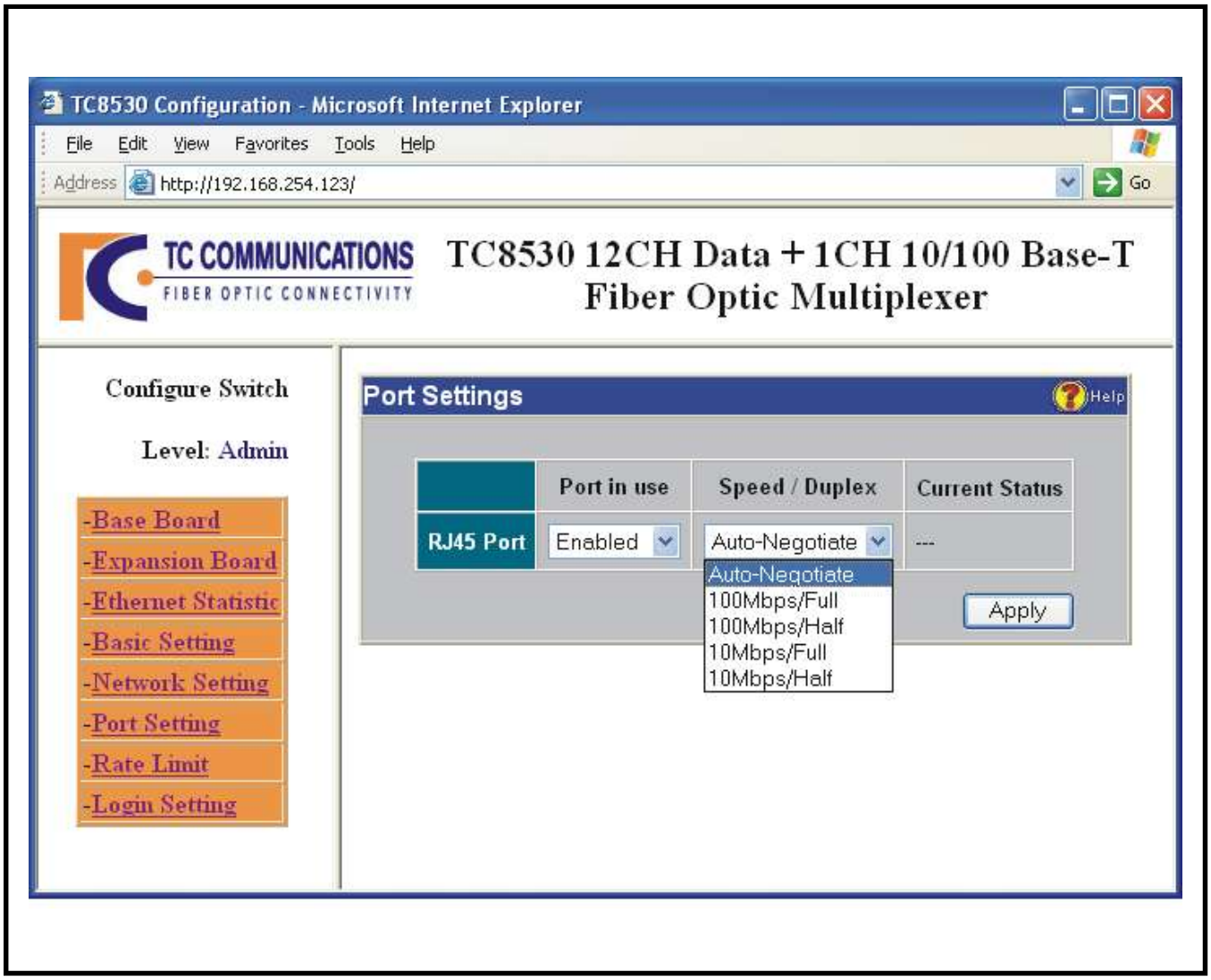

Figure 26. TC8530's Ethernet Port Settings

Note: When you disable the Ethernet port, you will see that the port is still connected on "Current Status", however all packets that have been sent through that port will be dropped.

Rx (Ingress) Limit: Rate limiting for inbound traffic (data going into the TC8530 port). The default value of the rate limit is zero (no limit on the inbound traffic). The rate limit can be set from 32Kbps and up to 10Mbps in the "Rx Limit" field in increments of 32Kbps. If the rate limit is set in any increment of 32Kbps, then the "Actual Rate" limit field will automatically display the same value. Otherwise, the "Actual Rate" field will automatically display the next higher increment of the rate limit.

Tx (Egress) Limit: Rate limiting for outbound traffic (data going out from the TC8530 port). The default value of the rate limit is zero (no limit on the outbound traffic). The rate limit can be set from 32Kbps and up to 10Mbps in the "Tx Limit" field in increments of 32Kbps. If the rate limit is set in any increment of 32Kbps, then the "Actual Rate" limit field will automatically display the same value. Otherwise, the "Actual Rate" field will automatically display the next higher increment of the rate limit.

Example: Figure 27 below, shows how to set the Rx (Ingress) and Tx (Egress) rate limiting settings for the Ethernet port. Note that for the Rx Limit setting under "Nominal Rate," 500Kbps was entered, and the Rx Limit under the "Actual Rate" field automatically displays the next higher increment on the rate limit which is 512Kbps. On the other hand, the Tx Limit setting under the "Nominal Rate," 512Kbps was entered, and the Tx Limit under the "Actual Rate" field automatically displays 512Kbps.

When done, click Apply to apply the new settings. Click on the "Summary" link on the left side of the page to go to the summary page to check the settings applied, see figure 28 on next page.

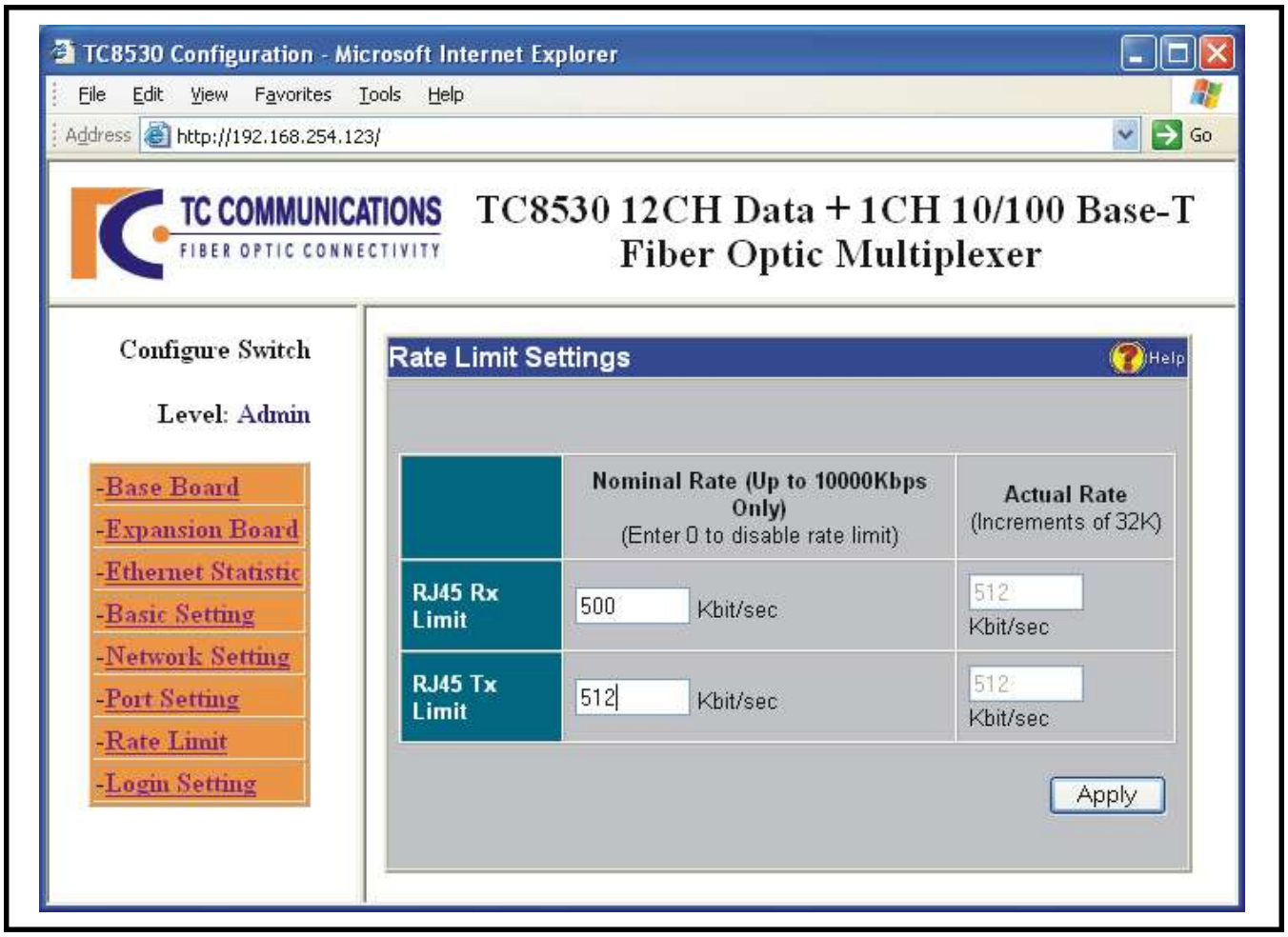

Figure 27. TC8530's Rate Limit Settings

Summary Page

The following diagram shows the Board Status for "Alarm," "LoopBack," "Far End Fault-A," "Far End Fault-A," and "Sync".

It also shows the Optical Status for Opt-A and Opt-B and the rate limit settings for ethernet port "Speed Duplex," "Rx Limit (Kbps)," "Tx Limit (Kbps)," "Link Status," "Alarm," rate limit settings applied on previous steps on last page.

Figure 28. TC8530's Switch Summary

Link Status for Primary and Secondary Optical Links

You can monitor the status of both Primary optical side "A" (Opt-A) and Optional, Secondary optical side "B" (Opt-B) on the web browser. The connectivity status for each link will be shown under the "Link Status" fields as illustrated on figure 28, above.

For example, if both optical sides "A" and "B" are connected for optical redundancy, you will see "Connected" under the "Link Status" fields. If there are no optical connections on neither optical side, nothing will be shown in figure 28 under the "Link Status" fields.

The state status of each Opt-A & Opt-B ports can also be monitored under the "State" fields as on figure 28, above. By default the "Opt-A" will be enabled. If optional optical redundancy is ordered, the "Opt-B" will be shown as enabled in figure 28 above.

Configure Login Settings and Levels of Privilege

Click the "Login Setting" link on the left side of the page. You will see the page as in figure 29, below.

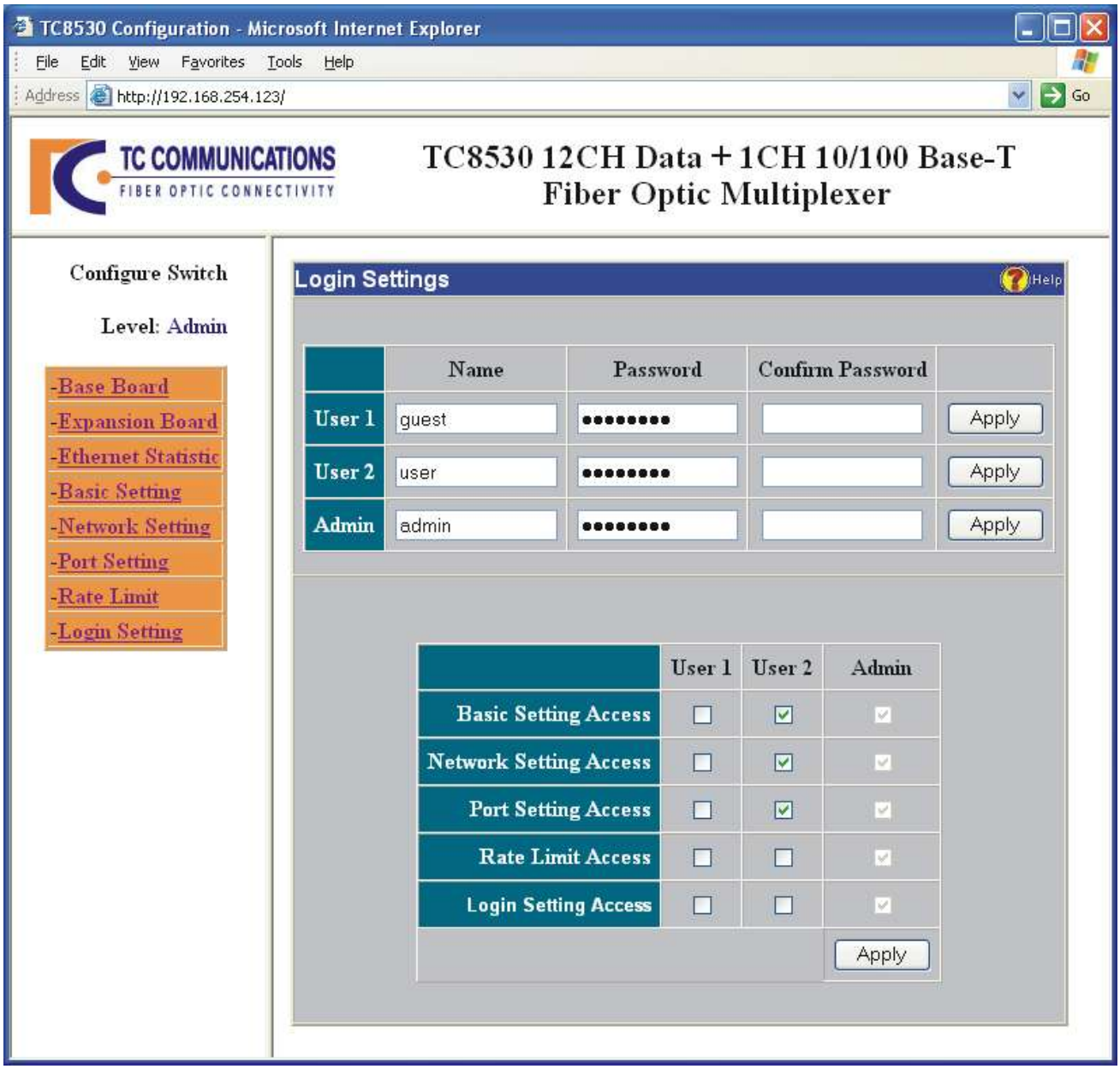

Figure 29. TC8530's Configure Login

Levels of Privilege

There are three levels of privileges based on users (User 1, User 2, and Admin).

User 1: This user has the lowest privilege of all three levels.

The default username is ***guest***, default password is ***password*** and default privilege is to only view the "Summary," and "Ethernet Statistic" links on the left side of the page as seen on page 36.

User 2: This user has intermediate privilege of all three levels.

The default username is ***user***, default password is ***password*** and default privilege is to view the "Summary," "Ethernet Statistic," "Basic Setting," "IP Setting," and "Port Setting" links on the left side of the page as seen on page 36.

Admin: This user has the highest privilege of all three levels.

The default username is ***admin***, default password is ***password*** and default privilege is to view all links as seen on the left side of page 36 such as, "Summary," "Ethernet Statistic," "Basic Setting," "IP Setting," "Port Setting," "Rate Limit Setting," and "Login Setting."

Note: Only Admin has access to Telnet and/or Console settings.

Figure 29depicts the Login Settings, there are two sections for changing the usernames, passwords and user privileges.

The top section of the window is used to change the usernames and passwords of User 1, User 2, and Admin. After any change to a user, you must click "Apply" on that particular user to apply the new settings. If you change the username and password of the current Admin, you will see the new authentication windows as on next page.

The lower section of the window is used to assign the User 1 and User 2 privileges (note: Admin privileges cannot be changed) . After you make any change, you must click "Apply" on that section to apply the new settings.

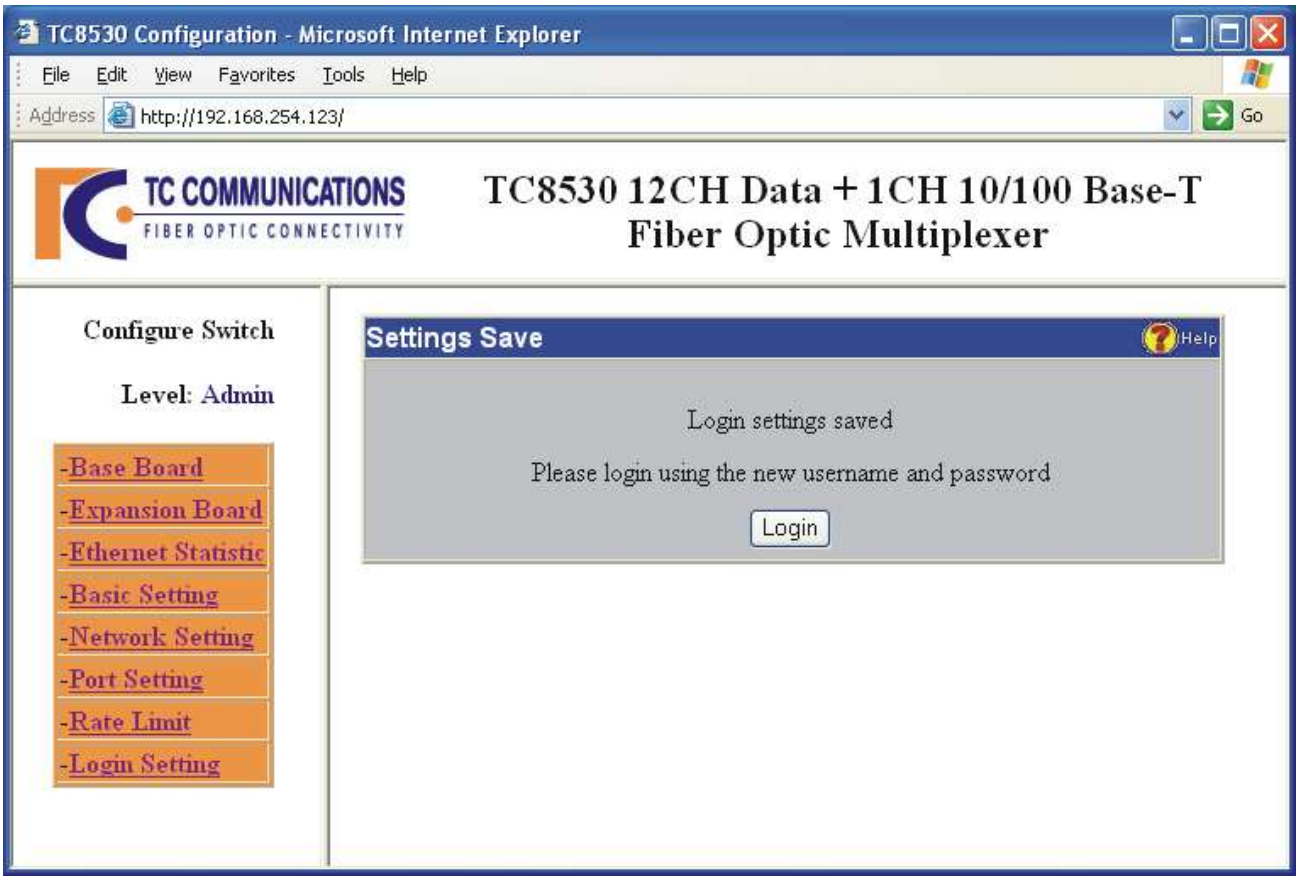

Figure 30. New Settings Saved

Figure 31. Login with New Settings

Telnet Settings

You can also use Telnet to set the IP configuration, username, and password.

Note: The Telnet default "timeout" is two minutes.

```
Telnet 192.168.254.123
TC8530 Console Ver 1.0
login:  admin
password:
Password Accepted
Type help for more information

help
TC8530 Console Ver 1.0

help:
        Usage: "help <command>"
        Used to find more information on various commands.

<command>:
        set     - Set different network settings.
        show    - Show all network settings.
        logout  - Logout.
        reset   - Reset switch.
        help    - This help screen.

e.g. help set
OK

help set

set:
        Usage: "set <variable> <value>"

<variable>:
        ip              - The IP address of the device (ie: 192.168.254.123)
        netmask         - The netmask for the device (ie: 255.255.255.0)
        gateway         - The gateway for the device (ie: 192.168.254.1)
        username        - Login username (ie: user)
        password        - Login password (ie: password)
        default         - Set the unit back to factory default
OK

show
IP: 192.168.254.123
Subnet: 255.255.255.0
Gateway: 0.0.0.0
Admin Name: admin
Admin Pass: admin
OK

logout
```

Figure 32. TC8530's Telnet Settings

Chapter 6 - PC IP Configuration

To check your PC's IP Address and Network Mask. (Windows 98/ME)

1. Open “Control Panel”
2. Open “Network”
3. Click on the TCP/IP for the network card
4. Click “Properties”

(**Attention**: Please copy down the existing setting before making any changes. Contact your network administrator if you are unsure about the settings. Improper settings may result in disruption of the existing network.)

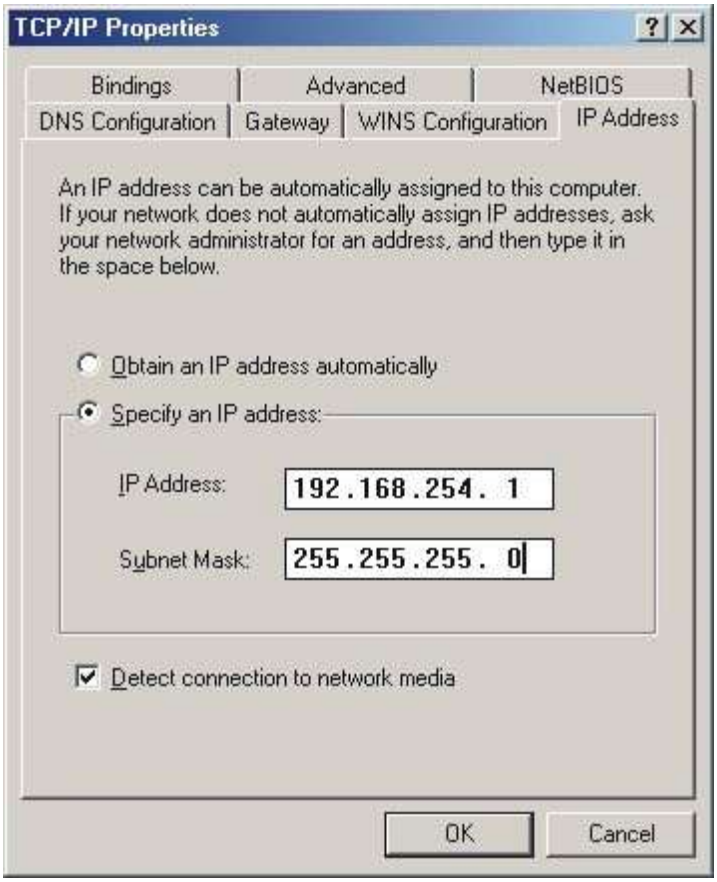

Figure 33. TCP/IP Properties

Under the TCP/IP Properties

Select the “Specify an IP address” option and type in the following

IP Address: 192.168.254.1 (Please make sure no other network device are using the same IP address.)

Subnet Mask: 255.255.255.0

Click OK and reboot the computer.

Chapter 7 - Specifications

Channel Capacity

Data ..... 4, 8, or 12 Channels

Data Rates

Ethernet ..... 10 Mbps
Async (per channel) ..... 128 Kbps**
Sync (per channel) ..... 64 Kbps**

Electrical

Connectors ..... RJ-11 & RJ-45 Female
Interface ..... RS-232, RS-422, RS-485**, TTL**, Dry Contact Relay**, Analog or Intercom**
TTL
Input Voltage Maximum Rating ..... -0.5 to 7V
Recommended TTL Input Voltage .....
Vin High ..... 2.0V to 5V
Vin Low ..... 0V to 0.8V

Factory Default Settings

IP Address 192.168.254.123
Unit Set As Either ..... Master or Slave

Optical

Transmitter ..... LED/ELED/LASER
Wavelength ..... 850/1310nm Multimode
..... 1310/1550nm Single Mode
Connector ..... ST* (FC optional)
Loss Budget .....
..... 15dB Multimode 850/1310nm @62.5/125μm
..... 20dB Single Mode 1310/1550nm @9/125μm

System

Bit Error Rate ..... 1 in 10^{10} or better

Indicators

System ..... Power A (2 ea.), Power B (2 ea.), Vcc, Vcc1, Vcc2, Alarm
Optic ..... Sync, Rx-A, Rx-B, USE-B
Channel Status ..... Alarm, FEF-A, FEF-B, LB, IN, OUT, MSTR/SLVE, LED-DATA
Ethernet Signal Status ..... 100M, FULL/COL, LNK/ACT
Diagnostic Functions ..... Local Loopback, Remote Loopback, Signal Generator,
..... Disable Alarm, Web Browser.

Power Source

Standard ..... 12VDC @1.2 Amp
Optional ..... 24VDC @600mA or
..... 115/230VAC w/external power cube

Temperature**

Operating (standard version) ..... -10°C to 50°C
..... Hi-Temp "T" version (optional) -20°C to 70°C
Storage ..... -40°C to 90°C
Humidity ..... 95% non-condensing

Physical

"Pizza Box" with two cards

Height ..... (4.44 cm) 1.75"
Width ..... (48.3 cm) 19"
Depth ..... (24.8 cm) 9.75"
Weight ..... (1.86 gm) 65.6 oz

"Stand Alone" with two cards

Height ..... (6.71 cm) 2.62"
Width ..... (18.1 cm) 7.10"
Depth ..... (24.8 cm) 9.75"
Weight ..... (1.46 Kg) 51.4 oz

**ST is a trademark of AT&T*
***Consult factory for higher data rates, higher temperature requirements or availability.*

Chapter 8 - Return Policy and Warranty

Return Policy

To return a product, you must first obtain a Return Material Authorization number from the Customer Service Department. If the product's warranty has expired, you will need to provide a purchase order to authorize the repair. When returning a product for a suspected failure, please provide a description of the problem and any results of diagnostic tests that have been conducted.

Warranty

Damages by lightning or power surges are not covered under this warranty.

All products manufactured by TC Communications, Inc. come with a five year (beginning 1-1-02) warranty. TC Communications, Inc. warrants to the Buyer that all goods sold will perform in accordance with the applicable data sheets, drawings or written specifications. It also warrants that, at the time of sale, the goods will be free from defects in material or workmanship. This warranty shall apply for a period of five years from the date of shipment, unless goods have been subject to misuse, neglect, altered or destroyed serial number labels, accidents (damages caused in whole or in part to accident, lightning, power surge, floods, fires, earthquakes, natural disasters, or Acts of God.), improper installation or maintenance, or alteration or repair by anyone other than Seller or its authorized representative.

Buyer should notify TC Communications, Inc. promptly in writing of any claim based upon warranty, and TC Communications, Inc., at its option, may first inspect such goods at the premises of the Buyer, or may give written authorization to Buyer to return the goods to TC Communications, Inc., transportation charges prepaid, for examination by TC Communications, Inc. Buyer shall bear the risk of loss until all goods authorized to be returned are delivered to TC Communications, Inc. TC Communications, Inc. shall not be liable for any inspection, packing or labor costs in connection with the return of goods.

In the event that TC Communications, Inc. breaches its obligation of warranty, the sole and exclusive remedy of the Buyer is limited to replacement, repair or credit of the purchase price, at TC Communications, Inc.'s option.

To return a product, you must first obtain a Return Material Authorization (RMA) number and RMA form from the Customer Service Department. If the product's warranty has expired, you will need to provide a purchase order to authorize the repair. When returning a product for a suspected failure, please fill out RMA form provided with a description of the problem(s) and any results of diagnostic tests that have been conducted. The shipping expense to TC Communications should be prepaid. The product should be properly packaged and insured. After the product is repaired, TC Communications will ship the product back to the shipper at TC's cost to U.S. domestic destinations. (Foreign customers are responsible for all shipping costs, duties and taxes [both ways]. We will reject any packages with airway bill indicating TC communications is responsible for Duties and Taxes. To avoid Customs Duties and Taxes, please include proper documents indicating the product(s) are returned for repair/retest).